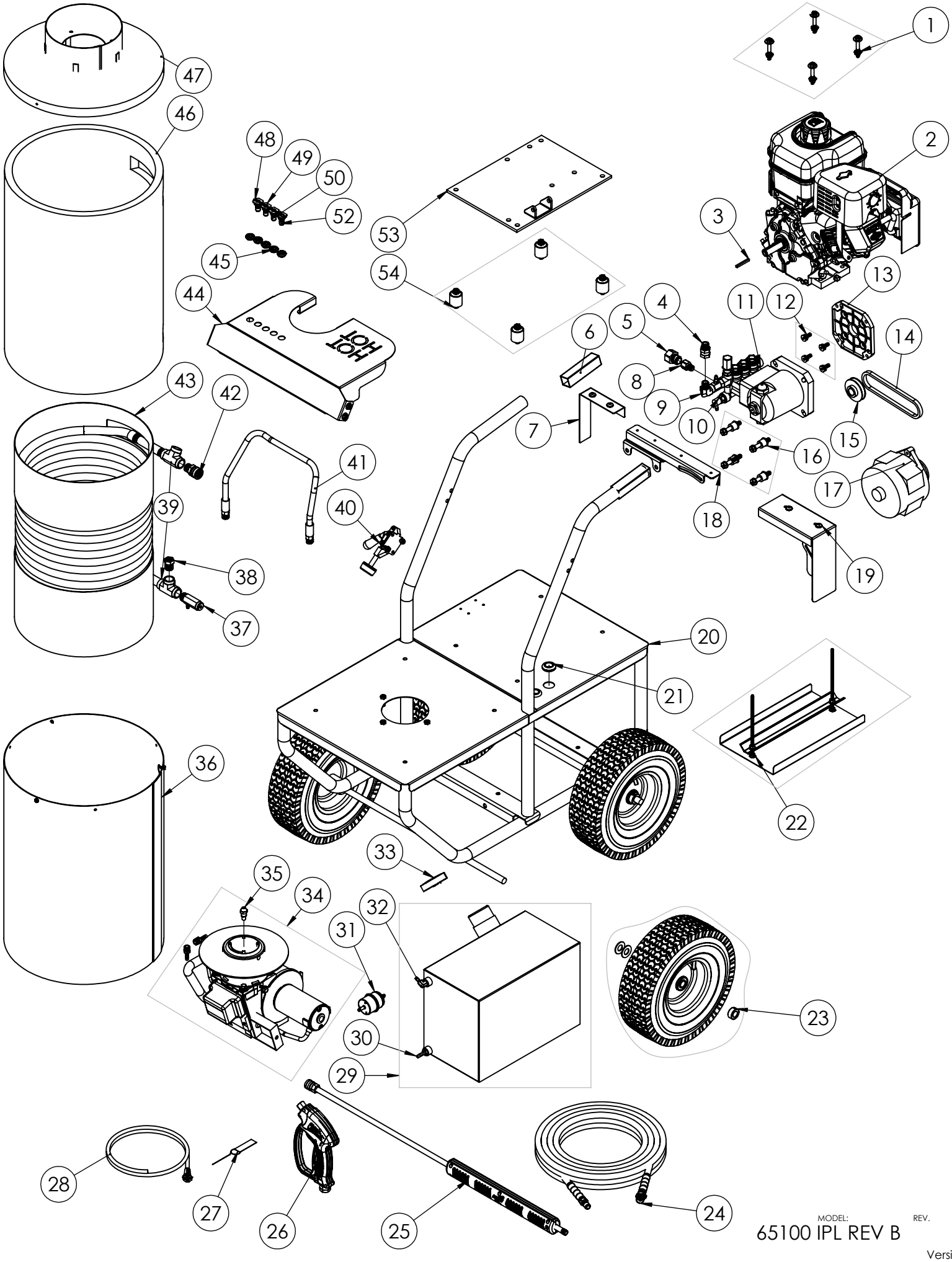

MODEL: REV.

65100 IPL REV B

Version:

ITEM	PART NO	QTY.	DESCRIPTION
1	7106476	1	ENGINE MOUNT, HARDWARE KIT
2	n/a	1	ENGINE, 8HP GAS (1100 SERIES) BRIGGS
3	7100523	1	KEY, 5HP ELECTRIC & LG GAS 1/4" x 1 3/4"
4	7100048	1	ADAPTOR, 3/8" FPT x 3/8" MI SWIVEL
5	7100355	1	FITTING, INLET GHT(F) X 3/8" NPT(M)
6	7101301	2	GRIP TUBE, 1" x 1" x 4 1/2"
7	7115175	1	PUMP/BELT GUARD W/ MOUNTING HW
8	7100041	1	ADAPTER 3/8" FNPT x 1/4" MNPT
9	7100287	1	ELBOW, 3/8" NPTM x 3/8" NPTF
10	7101356	1	THERMAL RELIEF VALVE 3/8" M-NPT
11	7106274	1	PUMP, CAT 4DNX25GSI
12	7115224	1	PUMP PLATE MOUNTING HARDWARE
13	7103840	1	PLATE, KING BRUTE PUMP MOUNTING
14	7104705	1	BELT, KING BRUTE ALTERNATOR
15	7104706	1	PULLEY, ALTERNATOR KING BRUTE
16	7115180	1	PUMP HOUNTING HARDWARE
17	7115191	1	ALTERNATOR W/ MOUNTING HARDWARE
18	7112792	1	ALTERNATOR BRACKET, KING BRUTE BLACK
19	7115176	1	ALT./ BELT GUARD W/ MOUNTING HW
20	7108585	1	KING BRUTE FRAME WELDMENT
21	7200207	2	GROMMET, 1 3/8"
22	7115190	1	BATTERY TRAY/HOLD DOWN W/ MOUNTING HW
23	7115118	4	WHEEL SVC KIT
24	7107495	1	HOSE, 3/8" x 50' x 45000PSI RUBBER
25	7100550	1	LANCE, 36" INSULATED
26	7108134	1	GUN,5075PSI 12GPM 3/8 FNPT IN 1/4 FNPT
27	7102045	1	TOOL, NOZZLE CLEANING, UNIVERSAL
28	7102207	1	KIT, SVC ASSY SOAP HOSE W/PLASTIC FILTER
29	7115178	1	FUEL TANK SVC ASSY W/ MOUNTING HW, KB
30	7100423	3	FITTING, BARBED 1/4 HB X 1/4 NPT-M
31	7100337	1	FUEL FILTER, MODEL 160
32	7100284	1	ELBOW HOSE BARB, BRASS 1/4 MPT x 1/4 HB
33	7100189	1	FUEL CAP CHROME VENTED
34	7115124	1	BURNER SVC ASSY, KING BRUTE
35	7102263	1	FUEL NOZZLE, 1.50 X 80° A
36	7103957	1	TANK SKIN
37	7103522	1	RELIEF VALVE, 1/2" NPTM x 1/4" HB 4000PSI
38	7100353	1	REDUCER 1/2" NPTM x 3/8" NPTF
39	7101261	2	TEE, HYDRAULIC 1/2" NPTF
40	7115125	1	BRAKE SVC ASSY
41	7100433	1	HOSE, 3/8" x 2' x 4000PSI CRIMP
42	7102246	1	COUPLER, 3/8" x 1/2" NPTM
43	7200189	1	KING BRUTE COIL
44	7115192	1	HEAT SHIELD AND MOUNTING HARDWARE
45	7106833	5	HOLDER, NOZZLE SINGLE
46	7101543	1	INSULATION BLANKET
47	7104093	1	TANK HEAD ASSEMBLY
48	7100662	1	NOZZLE, 3.0 x 40° WHITE 1/4 QC-M
49	7100661	1	NOZZLE, 3.0 x 25° GREEN 1/4 QC-M
50	7100660	1	NOZZLE, 3.0 x 15° YELLOW 1/4 QC-M
51	7100286	1	ELBOW, 1/4" NPTM x 1/4" NPTF STREET
52	7100668	1	NOZZLE, SOAP BRASS #40 X65 1/4 QC-M BL
53	7112795	1	ENGINE PLATE, KING BRUTE BLACK
54	7115120	1	VIBRATION MOUNTING KIT