comer industries

Quality system certified
UNI EN ISO 9001

www.comerindustries.com

INSTALLATION, USE AND MAINTENANCE INSTRUCTION MANUAL

Product: 628

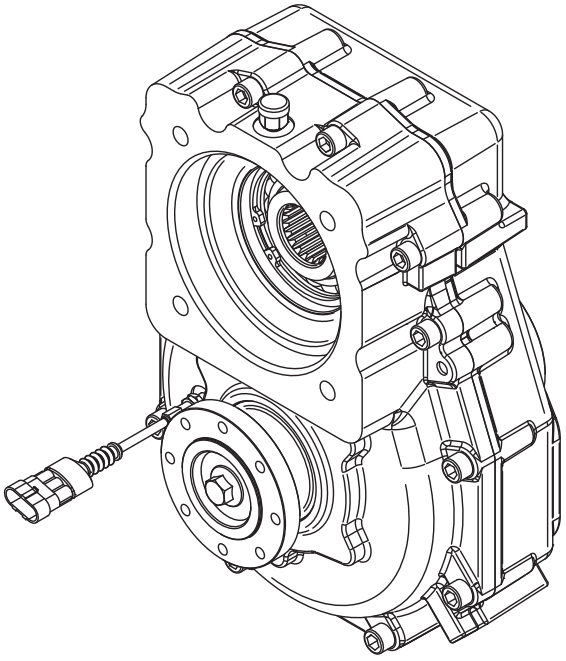

Release	Update description

THIS PAGE INTENTIONALLY LEFT BLANK

This manual contains the instructions to correctly perform the installation, use and maintenance of the product.

The product was designed and built exclusively for the use described in this manual. Any improper use of the product could compromise its integrity and / or be a source of danger.

Anything that is not provided for in this manual is not allowed. COMER INDUSTRIES S.p.A. (hereinafter, "**COMER INDUSTRIE**S") disclaims any liability that may arise from the installation, use and maintenance of the product that does not comply with the instructions described in this manual.

The natural process of wear and aging of the product cannot be considered a defect / defect of the product itself.

The drawing in the front page is related to a typical product configuration. The actual product may differ from the one represented.

Features and specifications are subject to change without notice at the sole discretion of COMER INDUSTRIES.

The original installation, use and maintenance instructions have been written in Italian. In the event of conflict, the Italian version of this manual will prevail over those written in other languages

comer industries

INDEX

BASIC INFORMATION 5
GENERAL INFORMATION 5
USE OF THE PRODUCT 5
CONSTRUCTOR LIABILITY 6
SYMBOLS 7
ENVIRONMENT, HEALTH & SAFETY 8
REQUIREMENTS 8
PERSONAL PROTECTIVE EQUIPMENT (PPE) 8
MANUAL HANDLING 8
RESIDUAL RISKS 9
PRODUCT DISPOSAL 10
TECHNICAL INFORMATION 11
PRODUCT IDENTIFICATION 11
DIMENSIONAL DRAWING 12
INSTALLATION & COMMISSIONING 13
TRANSFER & STORAGE 13
HANDLING 13
PAINTING 15
INSTALLATION 15
INSTALLATION CHECK 16
SAFETY GUARDS 16
NOISE 16
OPERATIONS & INSPECTIONS 17
INSPECTIONS 17
MAINTENANCE INTERVALS 17
MAINTENANCE 18
LUBE OIL 18
HYDRAULIC ACTUATIONS 19
CLEANING 19
EXTRAORDINARY MAINTENANCE 19

BASIC INFORMATION

GENERAL INFORMATION



Before handling the product, it is necessary to carefully read this instruction manual. In case of doubts or not perfect understanding of the recommendations indicated therein, it is advisable to contact COMER INDUSTRIES.
COMER INDUSTRIES cannot be held responsible for any damage to human health, goods or properties caused by ignorance or incorrect application of the instructions and recommendations contained in this manual.
This manual must always be kept available for the people who will work on the product, in a safe and accessible position.



Alterations, corrections, masking or the elimination of parts of the text of this document are strictly forbidden.



INTELLECTUAL PROPERTY
COMER INDUSTRIES reserves all rights related to this manual and to the relative documentation.
The customer who receives this manual recognizes this right of COMER INDUSTRIES and agrees not to make the information contained therein (or contained in the relative documentation) accessible, even partially, to third parties other than the use for which it was provided without the written authorization from COMER INDUSTRIES.

USE OF THE PRODUCT



ATTENTION
The Product described in this Instruction Manual can only been used in the approved application and within the operating parameters that are indicated in the following documents:
- The present Instruction Manual.
- The Product Dimensional Drawing relevant to the product code as indicated in section “Technical Information” of the present Instruction Manual.
- The Product Catalogue (when available).
- The Application Approval or the Product Specification for the product code to which this Manual refers to (when available) which are part of the contractual documents shared between the manufacturer of the machine where the product is installed and COMER INDUSTRIES.

In the event of a conflict between the instructions contained in the aforementioned documents, the following documents will prevail, in order: Application approval; Dimensional drawing; Instruction Manual; Product Catalogue.



The Product must be used with the correct type and quantity of lubricants as indicated in this Instruction Manual, in the dimensional drawing - see the “technical information” section - or, if applicable, in the Product Catalogue.



The Product must be handled, assembled, installed, used and maintained following the instructions described in this manual by staff who are qualified for that specific task.
Qualified staff are people who, based on their training and experience, can identify the risks and avoiding situations that can be dangerous for themselves and for the equipment.



In case of need of replacement of any component of the Product for maintenance, it is mandatory to use original components/parts supplied by COMER INDUSTRIES.



Failure to comply with the instructions described in this manual may lead to breakage or damage to the product not covered by the guarantee. COMER INDUSTRIES disclaims any liability that may arise from the installation, use and maintenance of the product that does not comply with the instructions described in this manual.



NOTE: The operation in hazardous (ATEX classified) areas is not permitted unless specifically indicated in the product documentation/certification.

For the purposes of European Directive 200/42/EC on machinery, the Product is considered partly completed machinery, which will be fitted onto other machines and/or installations. The Product must not be incorporated into them until all safety issues have been resolved, and it is not permitted to start up the final Product (for its intended use) until it has been verified as compliant with Directive 2006/42/EC on machinery.
The Customer must accept responsibility for compliance with the Directive 200//42/EC on machinery and any other European Community directive relating to safety of machinery.
If local legislation is more restrictive than the provisions of the applicable European Community Directive, the Customer is obliged to comply with the provisions of local legislation. If the Directive 2006/42 / EC (or any other European Community Directive applicable to safety and health protection) is not implemented or, in any case, does not find application in the State of the customer, the latter is obliged to comply with applicable local legislation.

CONSTRUCTOR LIABILITY

COMER INDUSTRIES will not be liable for direct, indirect or consequential damages caused to the product or by the product to things / people in the event of:

- alteration of or tampering with of the product or part of it;
- improper use of the product outside the applications and operating parameters indicated in the documentation listed in the "Use of the product" paragraph of this manual;
- product used or operated in a manner contrary to the occupational safety regulations in the country where the machine operates;
- operations on the product performed by personnel not properly trained, trained, qualified or authorized;
- installation of the product inside the operating machine performed incorrectly;
- failure to observe the instructions described in this manual.

SYMBOLS

The following symbols are used in this document to underline specific risks and obligations:

	**OBLIGATION** Mandatory action		**PROHIBITION** It is forbidden to carry out the indicated operation
	**INSTRUCTION** Refer to detailed instructions for such operation		**NO MAINTENANCE** Do not carry out maintenance with unit in operation
	**SAFETY GLOVES** Must be worn by all authorized people to work on the equipment		**NO TRANSIT** No transit under suspended loads
	**EAR PROTECTION** Must be worn by all people working around the equipment		**SAFETY GUARDS** Do not remove safety guards
	**PROTECTIVE CLOTHING** Must be worn by all authorized people to work on the equipment		**WARNING** Extremely important instruction / Operation to be performed with care
	**EYE PROTECTION** Must be worn by all authorized people to work on the equipment		**OVERHEAD LOAD** Danger due to the presence of overhead load
	**SAFETY FOOTWEAR** Must be worn by all authorized people to work on the equipment		**COUNTER ROTATING GEARS** Danger of entrapment due to presence of moving parts
	**HEAD PROTECTION** Must be worn by all people during this type of operation		**HOT SURFACES** Danger due to the presence of hot surfaces
			**ELECTRICITY** Danger due to the presence of electrical parts potentially under tension

REQUIREMENTS

Any activity carried out on the product, such as, by way of example, its handling, storage, installation, initial start-up, connection to electrical or hydraulic lines, ordinary and extraordinary maintenance, as well as any repair must be carried out exclusively by qualified staff.
For the execution of extraordinary maintenance and repair operations it is highly recommended to contact COMER INDUSTRIES or its authorized service center.
During all activities on the product, the Customer must observe the environmental, health and safety regulations, as well as follow the instructions contained in this manual or other manual supplied by COMER INDUSTRIES, with particular attention to the danger signs on the product or on its components.

PERSONAL PROTECTIVE EQUIPMENT (PPE)

IMPORTANT
The worker must use the Personal Protective Equipment (PPE) necessary to perform the lifting, transport, operation, maintenance and cleaning of the Product at any time during activities.

The minimum set of PPE to be used in the various stages of operation with the Product are indicated in the list below, however the operator must also adhere to any eventual additional local rule/regulation that may prescribe more stringent/additional PPE to be used:



WHEN TRANSPORTING/HANDLING:
Protective clothing; Safety footwear; Safety Gloves; Head protection

WHEN OPERATING THE PRODUCT:
Protective clothing; Safety footwear; Safety Gloves; Eye protection

WHEN INSTALLING, CLEANING & SERVICING:
Protective clothing; Safety footwear; Safety Gloves; Eye protection

ADDITIONAL PRECAUTIONS
Operators must guarantee an effective prevention system by constantly monitoring cleaning and integrity of the structures of the machine and around the machine.
- Actuate a specific periodical cleaning and maintenance plan of the unit;
- In case of accidental overloads or damage to the unit, stop the unit and eventually carry out the necessary repair procedure.

WARNING: Do not work on the unit with unit in movement/operation.

MANUAL HANDLING



If during the handling of the equipment or of components of the equipment a lifting operation is required, please consider that the maximum weight that can be lifted manually is 10 kg.
It is highly recommended lifting such load by keeping it as close as possible to the body and bending the knees and not the back.

RESIDUAL RISKS

IMPORTANT

The Product has been designed and made with the appropriate measures in order to guarantee the safety of the end user. However, there are some residual risks connected to the installation and the use of the Product as listed below:

Directive 2006/42/EC Annex I	Description	Remarks
1.3.4	Risks due to surfaces, edges or angles	Use safety gloves when handling. The machine manufacturer is responsible for the correct positioning of the product inside the machine, aimed at limiting the indicated risks.
1.3.7	Risks related to moving parts	Protection of the operator from potential risks related to moving parts is responsibility of the manufacturer of the machine where the unit is installed.
1.3.8	Choice of protection against risks arising from moving parts	Choice of protection systems of the operator from potential risks related to moving parts is responsibility of the manufacturer of the machine where the unit is installed.
1.4.1	General requirements for guards and protective devices	The choice of requirements for guards and protective devices is the responsibility of the manufacturer of the machine where the unit is installed.
1.5.5	Extreme Temperatures	During operation the unit may reach high temperatures. It is responsibility of the manufacturer of the machine to protect from access during operations and install adequate warning on the machine.
1.5.8	Noise	The evaluation of the Product's contribution on the overall machine's noise and the evaluation of the overall noise is the responsibility of the manufacturer of the machine as well as the design of all necessary noise mitigation systems.
1.5.13	Emissions of hazardous materials and substances	The product contains substances (such as, by way of example, lubricating oils and greases) which, under conditions of use in accordance with the instruction contained in this manual, do not exit from the product itself. It is the responsibility of the machine manufacturer to take all necessary precautions in the event of leaks due to extraordinary circumstances.

In order to alert any operator during operation and maintenance of the unit of eventual residual hazards and risks, appropriate signs and danger symbols must be applied in the areas of the machine where the unit is located as indicated in the example below



The greatest risks occur when an operator enters the hazardous area to regulate, clean, maintain or perform other manual operations that are necessary on the Product, therefore such operations must be carried out with the utmost care and only by qualified personnel.

PRODUCT DISPOSAL

"WASTE" STANDS FOR ANY SUBSTANCE OR OBJECT THE USER THROWS AWAY OR HAS DECIDED TO THROW AWAY OR IS TO BE THROWN AWAY AS DEFINED BY NATIONAL LAWS OF THE COUNTRY WHERE THE DISPOSAL OF WASTE IS ARRANGED.

The waste generated by the use or demolition / disposal of the product is to be considered "special waste" and therefore potentially dangerous and must be treated in accordance with the laws of the country where the waste disposal is carried out.



Liquid or solid waste deriving from the use and/or demolition/disposal of the product must be managed in the most complete respect for the environment, avoiding any form of contamination of the soil, air, water and, in general, of natural resources, in the absence of danger to the environment and health, in full compliance with the laws of the country where the disposal takes place.

At the end of the product's life, the user must provide to its disposal by:
- Safely removing the unit from the machine;
- Emptying the lubricants and solvents and storing them in metal drums;
- Separating the parts of the unit according to the types of material;
- Cleaning the components;
- Storing the components in suitable places so they cannot be mixed with dangerous waste;
- Making sure that the waste produced as a result of the disposal of the product is subsequently managed in accordance with the legislation in force in the user's country



The disposal must be entrusted to qualified personnel.
When handling waste it is necessary to use appropriate PPE



Lubricant must be disposed of sensibly and not poured down.
Do not abandon the unit or any of its components in the environment.
Oils and solvents must be kept only in metal drums.

PRODUCT IDENTIFICATION

All the main data that characterize the product are indicated on the specific plate that is fixed on the product itself. The data contained on this plate (see typical plate reproduced below (*)) must be reported within each document and / or communication between the user and COMER INDUSTRIES. The position of the plate on the product can be indicated on the dimensional drawing or in the catalogue.

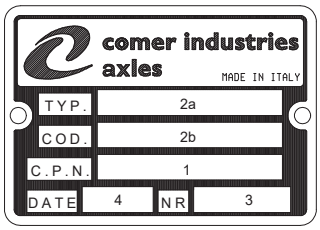

1. Customer product code (if present)
2. **COMER INDUSTRIES** Product type/code
3. Serial number part (if present)
4. Year of manufacture

NOTE (*): The plate applied to the unit may differ from what is indicated in the illustration on the basis of details and specific requests of the manufacturer of the machine where the unit is installed.

IMPORTANT
It is forbidden to remove, modify or tamper the identification plates.

DIMENSIONAL DRAWING

The dimensional drawing could contain important information relevant to the Product such as Customer's interfaces, lubrication requirements or Product performances. A typical example is reported here below. In order to obtain the dimensional drawing specific to your part number, please refer to COMER INDUSTRIES indicating the part number of the product indicated in the nameplate.

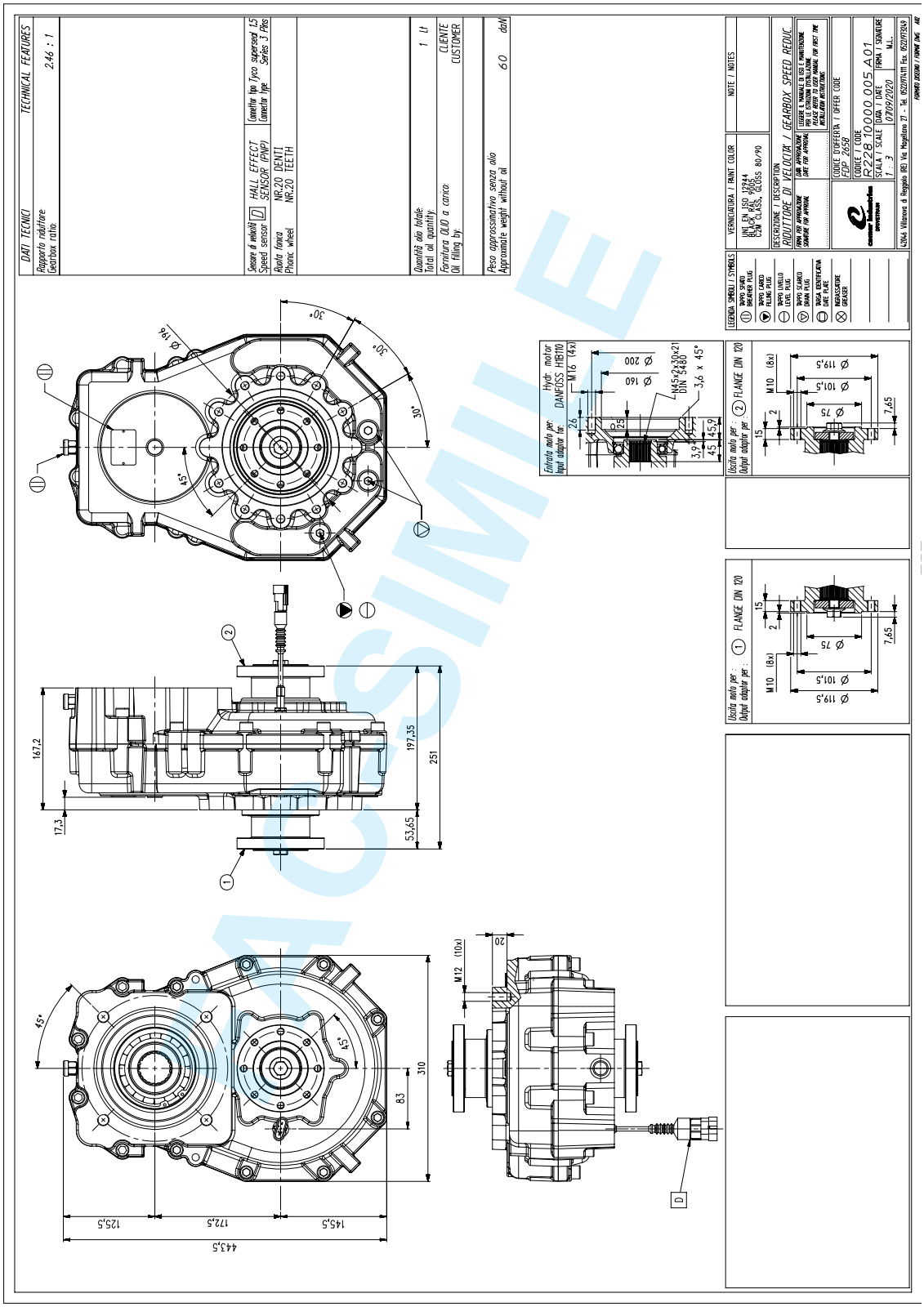

NON SIMILE

TRANSFER & STORAGE

Upon receipt of the goods check that:
- the packaging is in perfect condition;
- no parts are missing.

If packaging is damaged:
- open it in the presence of the carrier;
- check that the goods are in perfect condition;
- describe any damage found on the shipping documents and notify to COMER INDUSTRIES shipping department.

COMER INDUSTRIES packaging is normally only designed for road transport.



The Product must be stored in a dry place, sheltered from wind and rain.
Do not store the Product outside or directly onto the ground.

The Product can be seriously damaged if, while waiting to be installed, it is stored on premises where the temperature and humidity are critical:
- Do not expose the unit to temperatures below -20°C and higher than 50°C;
- Do not expose the unit to humidity less than 10% and higher than 80%.
- Do not expose the unit to aggressive or corrosive substances (such as contaminated air, ozone, gas, solvents, acids, alkaloids, salts and nuclear radiation).



Environmental conditions different from those specified may cause serious damage to the product and to any electronic equipment. The positioning of the product in an environment that does not correspond to the one indicated above may cause the warranty conditions to become void.



Protect any eventual connection or electrical part from dust and other elements.

If there is the need to store the Product for long periods (over 12 month), COMER INDUSTRIES must be contacted in order to receive proper preservation instructions depending on the required storage period and conditions.



WARNING

The following points must be carried out before installation after a long-term storage period:
- Check all seals and shaft seals & eventually replace the damaged ones.
- Change the oil if the unit was subject to excessive ambient temperatures during storage period.



It is forbidden to place the product on structures that have not been made for that particular purpose. It is forbidden to put material or equipment on the product.

HANDLING

Upon receipt of the goods the following conditions must be guaranteed:
- there is sufficient room to maneuver;
- there are the most suitable means available for unloading and positioning the goods in site.



Lifting, transporting / handling and positioning must be done by trained personnel always using the appropriate PPE as indicated in the Health & Safety section of the present manual, and eventual instructions (lifting points, position of center of gravity etc.) indicated in the dimensional drawing.



Before and during Product handling:
- Check the stability of the unit;
- Verify that the lifting means and its accessories (ropes, hooks, etc.) are suitable to lift and handle the weight of the unit/component;
- Strictly follow the local regulations in force for security and prevention of industrial injuries.



Make sure that the logistic structures and vehicles employed conform to the use and are in perfect working order. In the event load drops, in order to avoid parts from hitting people make sure there is no one in the field of action of the lifting equipment.



Handling is forbidden on dirt tracks, uneven or irregular ground.



Care should also be used to avoid violent impact during handling to prevent from damaging the product.

PAINTING

If the product is supplied without final painting, the recommendations below should be considered. Should further clarifications be required, it is advisable to contact COMER INDUSTRIES.

AREAS TO BE PROTECTED

There are areas of the product that need to be protected during the painting process. On these areas are not accepted halos of paint: any signs of paint shall be removed without damaging involved surface. After painting all parts previously protected shall be oiled to protect them from any oxidation (recommended products: Rusty 75, Tecnoprimaf Propac 0.40; alternatively, it shall be use products with equivalent technical features).

Unless otherwise stated in the technical documentation, the following details must be protected by paint:

Breathers and transparent level indicator plugs



Protuding shafts, pins and hubs

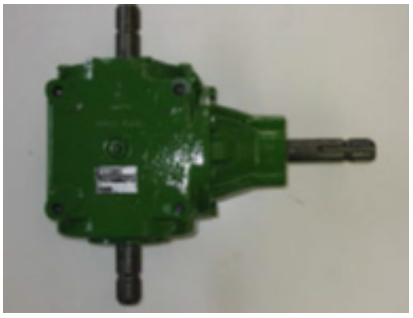

Seal rings

Seal rings shall be protected so that the paint does not affect the part in contact with the shaft.

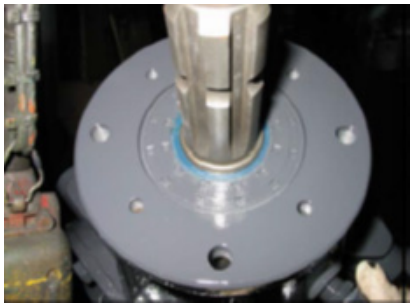

Product Nameplate

Identification plates on the product shall not have any stains and must be clearly legible.

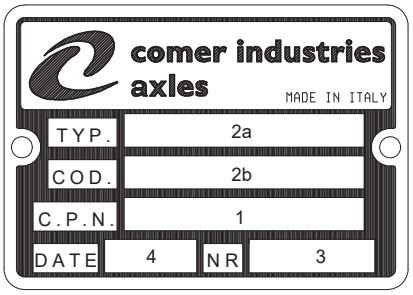

INSTALLATION

WARNING

Installation of the Product on the operating machine for which it has been designed is a very critical operation and must be performed only by highly qualified and trained personnel following strictly the instructions indicated in the present paragraph.

Carefully check on the overall dimensions drawing, all mounting dimensions, overall dimensions and couplings before proceeding with the installation of the gearbox on the operating machine (see section Technical Information of the present manual).

INSTALLATION CHECK

COMER INDUSTRIES products are sent to the customer after they have passed the internal inspections and tests necessary to guarantee correct operation. Given the above:

a) Assembly and testing of the unit on the customer's machine is at the expense of the latter.
b) the verification of the product during the installation process and the first start-up of the machine could take place under the supervision of COMER INDUSTRIES personnel, on the customer's premises, only if this has been agreed before delivery.



If COMER INDUSTRIES personnel will be required to attend the installation and initial start-up of the product, customer must ensure that these operations take place in compliance with the regulations on safety in the workplace, just as it is the customer's responsibility to provide COMER INDUSTRIES personnel with all the any necessary PPE.

SAFETY GUARDS

The nature of the product supplied by COMER INDUSTRIES implies parts in movement/rotation that may create a risk of entanglement and therefore of serious injuries to operators/users during machine operation.



The design and installation of adequate protection barriers designed to eliminate / limit the risk of entanglement is the sole responsibility of the machine manufacturer, who must provide it in the place where the product is installed.



The safety barriers may eventually be removed only by personnel authorized by the machine manufacturer. The responsibility for any consequences resulting from the removal of these protective barriers lies with the operator who performed the removal operation.



In any case, the removal of the protective barriers is allowed only during maintenance and / or any calibration of the product. The removal of the safety barriers outside the permitted cases constitutes a serious tampering with the product.



It is absolutely forbidden to remove the protection barriers when the product is in operation. The unit must be completely stopped and it is necessary to make sure that the machine cannot be accidentally restarted while maintenance operations are in progress. The protections must be reassembled before the new start-up.

NOISE



It is the responsibility of the manufacturer of the operating machine to verify the Sound Pressure Level reached by the unit in the various phases of operation, and the design and installation of systems designed to contain the acoustic intensity of the entire system below the maximum allowed level.
If the during the start up and commissioning operations the limits permitted by the law are exceeded, the machine manufacturer must indicate the obligation to wear appropriate ear protection systems.

INSPECTIONS



IMPORTANT

In order to guarantee long life and excellent performance to the Product, maintenance operations must be done on a regular basis.
Inadequate or poorly performed maintenance can, in fact, leads to unexpected breakages (with consequent significant repair costs), prolonged downtime or even damage to things/people.



WARNING

Maintenance operations of the product must be carried out exclusively by personnel who have adequate training and who have perfect knowledge of the contents of this instruction manual. The personnel working on the product must be equipped with the PPE indicated in the "Environment, Health and Safety" section of this manual, in addition to any additional ones required by applicable regulations.



Before maintenance operations, authorized people must ensure the disconnection from any power source (including eventual electrical power supplies), putting it “out of order” and taking all the necessary precautions to ensure it cannot be restarted accidentally as a system or in any of its moving parts.



During maintenance operations, wait for the unit to cool down before doing any maintenance work.
If the reachable surfaces exceed the temperature limits given in EN ISO 13732-1 (65°C for uncoated metals and occasional contacts of a short duration) it is necessary to wait for them to cool down before any work can be done as there is danger of burns!



After maintenance operations, and before starting the machine again it is always necessary to check correct tightness of the product’s parts that were removed to allow correct maintenance; check that the tools used for maintenance have been taken away from the unit working areas; put all guards, protections and safety devices back in place (if they had to be removed during maintenance) ensuring they are all in perfect working order and dispose of any waste, liquid or solid, in full compliance with the laws of the country where the disposal takes place.

MAINTENANCE INTERVALS

The maintenance intervals mentioned are for a normal use of the vehicle; intervals should be shorter if the vehicle used for particularly hard work.

When	What	Type
Before start up	- Oil leakage	O
During normal operations	- Oil leakage - Noise & vibrations	O O
After initial 100 hours	- Oil level check	O
After initial 200 hours	- Oil change - Cleaning the oil breather - Cleaning the magnetic plug	O O O
Every 300 hours or monthly[1]	- Oil level check - Cleaning the oil breather	O O
Every 1000 working hours or seasonal[1]	- Oil change - Cleaning the magnetic plug	O O

[1]Which of two conditions occurs first

LUBE OIL

WARNING

In order to guarantee long life and excellent performance to the product, it is essential to provide for its correct lubrication. Lubrication reduces friction and allows smooth relative movements between moving parts.
It is therefore advisable to carefully follow the instructions given in this chapter, as the incorrect execution of the oil inspection, filling, topping up or replacement procedure, as well as the use of an unsuitable oil, may cause damage and / or breakages of the unit not covered by warranty. COMER INDUSTRIES will not be liable for damage caused to the product or for damage - direct, indirect or consequential - caused by the product to things / people in the event of incorrect execution of the inspection, filling, topping up or oil replacement procedure, such as also of the use of an unsuitable oil.

The product is normally supplied without the first oil filling, so please check the correct filling before starting the unit.

RECOMMENDED LUBRICANT

We recommended use Shell Spirax S4 TXM

Other oil type: contact COMER INDUSTRIES

OIL INSPECTION:
Lubricating oil should be periodically checked (see maintenance intervals table) for contaminants. Oil should be changed if water presence or metal particles are identified. In the latter case, excessive presence of metal (with presence of chips) may indicate premature wear of the unit or other potential problem.

MAINTENANCE POINTS: Position and function of oil plugs and the correct oil Q,ty to fill into the dropbox, are indicate in the overall dimensions drawing (see section Technical Information of the present manual).

WARNING: Do not run any maintenance if the dropbox is hot (40° - 50°). Hot oil and hot components can cause injuries and burns. Avoid skin contact and wear protective gloves and eyeglasses.
WARNING: Make sure all fluids are contained during inspection, maintenance, tests, adjustment and repair of the product. Use suitable containers to collect the fluids before remove any component containing fluids. Dispose of all fluids following with local laws.

OIL TOPPING OFF:
- Remove the fill and level plug.
- Topping up the unit adding oil lubricant from the upper hole (filling plug hole) until correct OIL LEVEL reached: the oil flow out from the OIL LEVEL hole.

WARNING: if the quantity of oil used during topping up is greater than 10 % of the oil capacity then check for leaks.

OIL DRAINING
- Park the vehicle in a flat area or position the dropbox with drain plug placed down.
- Before draining oil it is mandatory to loosen the oil filler plug and the breather plug and wait for the accumulated internal pressure is completely released.

Then remove the drain plugs and drain the oil.
After oil draining:
- Plugs with or oil seal: check oil seal status.
- Refit all plugs in their seats.

OIL FILLING
- Remove the oil filling plug and oil level plug and fill dropbox with the required oil Q.ty from the oil filling plug hole.
- Check oil level. If necessary, add until correct OIL LEVEL reached: the oil flow out from the OIL LEVEL hole.
- When the oil filling procedure is finished, tightening all plugs.

WARNING: Do NOT mix synthetic lubricants with mineral lubricants

HYDRAULIC ACTUATIONS

For hydraulic actuations use only MINERAL OIL.
DOT brakes fluids are NOT compatible with std oils.

Operating pressure are indicate in the overall dimensions drawing (see section Technical Information of the present manual).

Position and dimension of the ports are indicate in the overall dimensions drawing (see section Technical Information of the present manual).

CLEANING

Cleaning of the unit can be carried out by personnel without specific technical skills, but still correctly trained on the main controls for disconnecting power sources and instructed on the main features of the Product in order to avoid dangerous situations.



WARNING: It is forbidden to do any cleaning when product's elements are still moving. Clean the unit only after the power sources have been disconnected.



IMPORTANT: Before blowing/washing the unit wait for it to cool down to avoid any dust and/or dampness getting in through the breather plug.
Avoid dirt and dust from sticking to the outer surface of the unit which would prevent its effective heat exchange or cause sealing lip damage:
- Clean the outer surface, eliminating the accumulation of dust and dirt.
- If washing with pressurized liquids, always avoid aiming the jet on sealing rings and breather plug.
- Always avoid peeling off the protective paint.
- Washing with liquids, it is advisable to treat the transmission after with antioxidant liquids.



WARNING: In case of presence of electronic equipment preassembled by the manufacturer, it is mandatory to read the indications given in the dimensional drawing of the product as indicated in the section Technical Information of the present manual regarding the IP RATING and observe them. It is however not recommended the use of pressurized liquid washing machines in the proximity of any electronic component in order to avoid any damage.

EXTRAORDINARY MAINTENANCE

Extraordinary maintenance are all other activities that may be carried out on the product that are not described by the present Manual and that may include (but not limited to) the following:
- complete/partial disassembly and assembly of the unit
- replacing/repairing worn or damaged parts (shafts/gears/bearings)
- replacing/repairing the sealing rings.

The instructions relating to the complete disassembly and assembly of the product are provided upon specific customer request addressed to COMER INDUSTRIES, specifying the product code indicated on the identification plate (see paragraph «Product identification).



For the execution of extraordinary maintenance operations, it is highly recommended to contact COMER INDUSTRIES or its authorized service center (see Company's website www.Comerindustries.com), in order to guarantee the perfect functioning of the product. Failure to comply with this indication during the warranty period will result in the forfeiture of the same warranty.



WARNING: Extraordinary maintenance must be performed only by highly trained and skilled personnel.