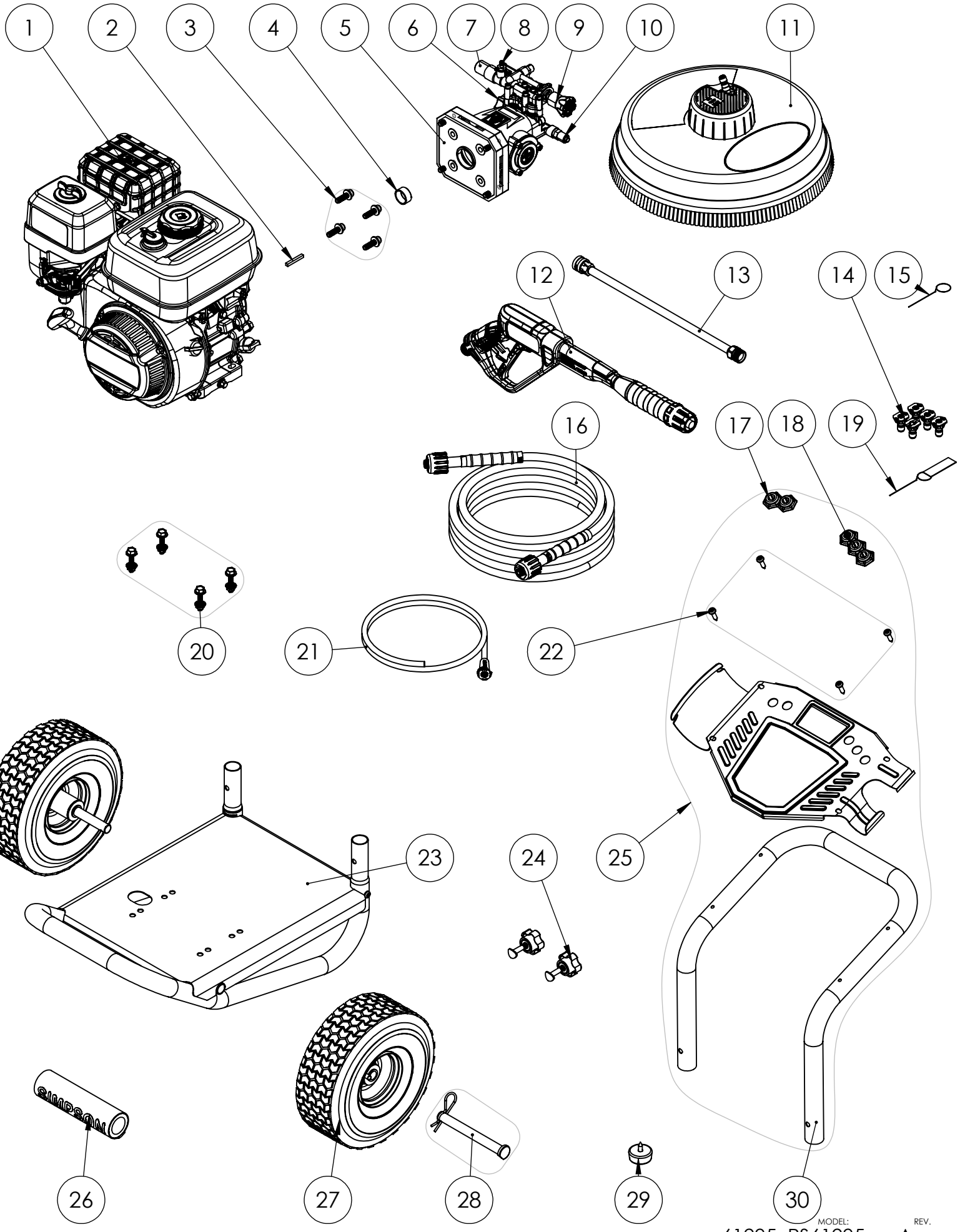

MODEL: 61295 PS61295

REV. A

Version:

ITEM NO.	PART NUMBER	DESCRIPTION	QTY.
1	110033	ENGINE, CRX225, 50 ST, 4.5 KW	1
2	7101506	KEY, SHAFT 3/16 X 3/16 X 1-1/2	1
3	7117730	PUMP/MOTOR MOUNTING HARDWARE KIT	1
4	7111996	SPACER, 7/8" ENGINE SHAFT 12.5 LONG	1
5	540005	PUMP, 54ALD23	1
6	7112362	WATER INLET KIT	1
7	7106686	OUTLET CONNECTION	1
8	7104228	SOAP INJECTOR KIT	1
9	7112354	BYPASS REPAIR KIT	1
10	7101359	THERMAL RELIEF VALVE	1
11	7108237	15" SURFACE SCRUBBER, 3700PSI	1
12	7112776SIM	GUN, REAR ENTRY, 2 PIECE, 3750PSI, M22, SIMPSON	1
13	7103550	LANCE, 16" W/1/4 QCLance 16" AND M22(M)	1
14	7109338	NOZZLE,#2.6 5PCSET 0, 15, 25, 40 & SOAP	1
15	7118789	SURFACE SCRUBBER TOOL, NOZZLE CLEANING, 0.5mm	1
16	7106622	HOSE, 5/16 X 25' GREY MORFLEX M22	1
17	7107067	HOLDER, NOZZLE 2PC RUBBER STRIP	1
18	7107068	HOLDER, NOZZLE 3PC RUBBER STRIP	1
19	7102045	TOOL, NOZZLE CLEANING, UNIVERSAL	1
20	7113822	ENGINE MOUNTING HARDWARE	1
21	7102207	KIT, SVC ASSY SOAP HOSE W/PLASTIC FILTER	1
22	7117740	MOUNTING SCREW SVC KIT	1
23	7119666	FRAME KIT, 12" PS BK1, SILVER SIM GRIP	1
24	7107941	KNOB BOLT ASSEMBLY	2
25	7119667	HANDLE KIT 61295	1
26	7105186	HANDLE GRIP, SILVER/WHITE SIMPSON	1
27	7103619	POWER WASHER WHEEL, 4" x 10" BLK W/ 5/8" BRG	2
28	7117725	AXLE, COTTER PIN SVC KIT	2
29	7103292	KIT, FOOT SVC ASY .625"	2
30	7119267	TUBE, HANDLE 12IN C-C POWER SHOT	1