Model 5.0 ARBC

Version:

Serial number:

Code: **14793**

20/06/2019

220-230 V - 50/60 Hz | **schuko**

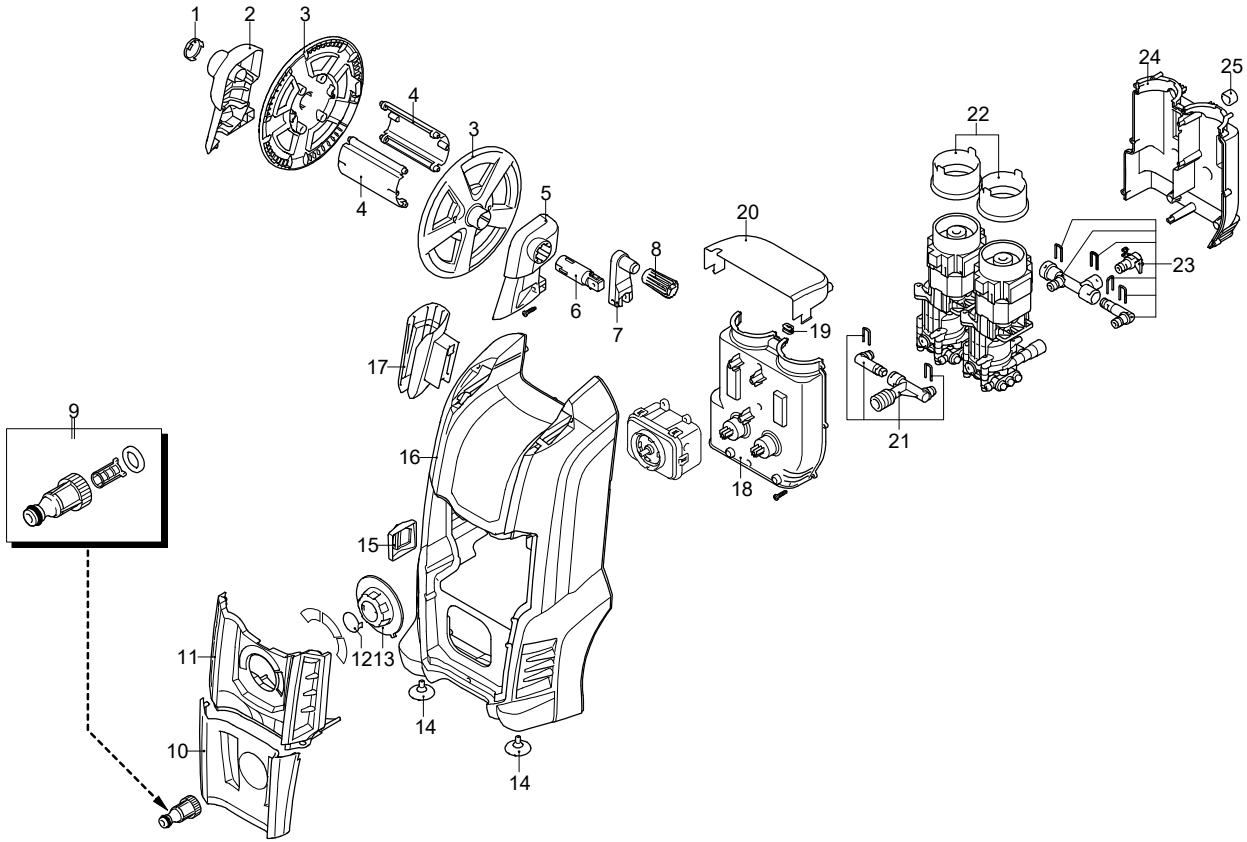

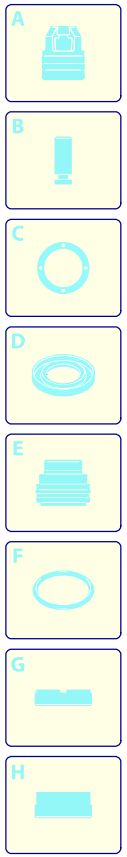

Validity	Pos.	Code	Description	Q
	1	4820410	Cover	1
	2	4580540	Bracket	1
	3	4101680	Plate	2
	4	4102120	Support	2
	5	4580550	Bracket	1
	6	4101750	Hub pin	1
	7	4101660	Lever	1
	8	4101673	Knob	1
	9	3082130	Water coupling kit	1
	10	4580530	Guard	1
	11	4580520	Guard	1
	12	4580800	Plug	1
	13	4580670	Knob	1
	14	4381640	Rubber foot	2
	15	4580630	Lock	1
	16	4580500	Casing	1
	17	4580590	Accessories carrier	1
	18	4580640	Conveyor	1
	19	4580660	Gland	1
	20	4580840	Guard	1
	21	4580900	Suction kit	1
	22	4380180	Guard	2
	23	4580910	Delivery kit	1
	24	4580650	Conveyor	1
	25	4580870	Rubber foot	4

UN_CE_2506-NM

Model 5.0 ARBC

Version:

Serial number:

Code: **14793**

20/06/2019

220-230 V - 50/60 Hz | **schuko**

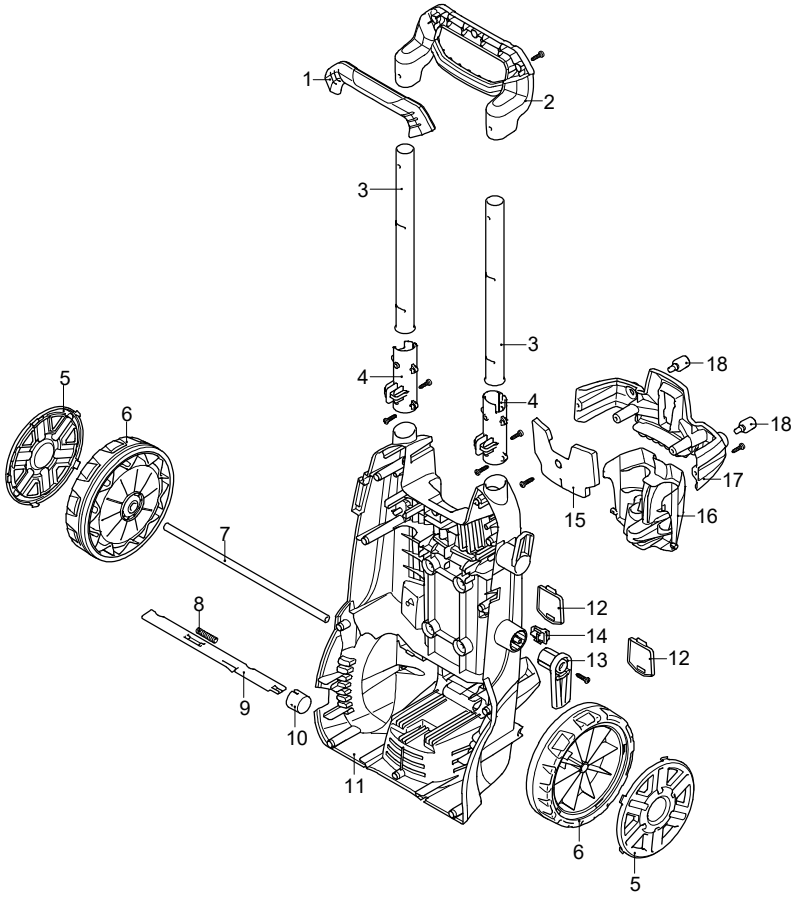

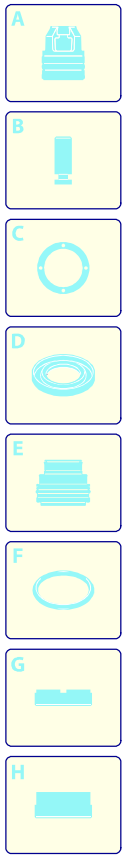

Validity	Pos.	Code	Description	Q
	1	4580610	Knob	1
	2	4580600	Handle	1
	3	4580770	Pipe	2
	4	4821080	Guide	2
	5	4381111	Guard	2
	6	4381100	Wheel	2
	7	4580880	Axle	1
	8	4821020	Spring	1
	9	4821110	Hook	1
	10	4220271	Lever	1
	11	4580560	Base	1
	12	4580570	Cover	2
	13	4220280	Accessories carrier	1
	14	4100180	Lever	1
	15	4580780	Guard	1
	16	4580760	Porta-accessori	1
	17	4580620	Porta-accessori	1
	18	2180330	Rubber foot	2

UN_CE_2507-NM

Model 5.0 ARBC

Version:

Serial number:

Code: **14793**

20/06/2019

220-230 V - 50/60 Hz | **schuko**

1

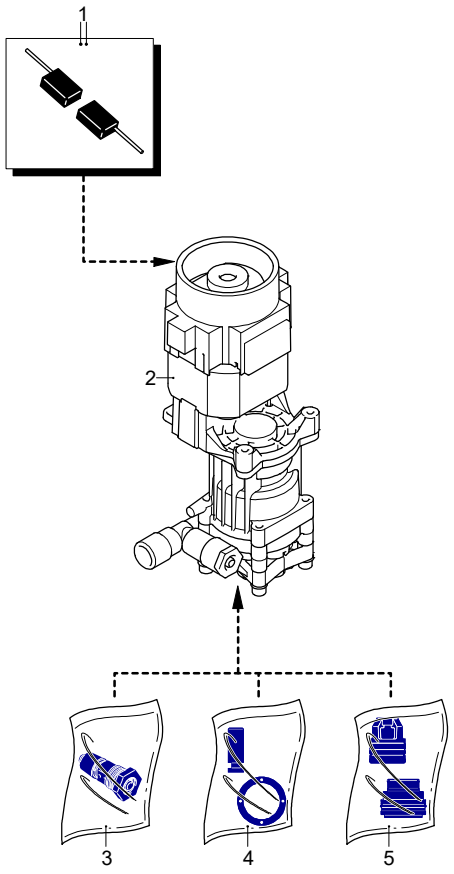

2

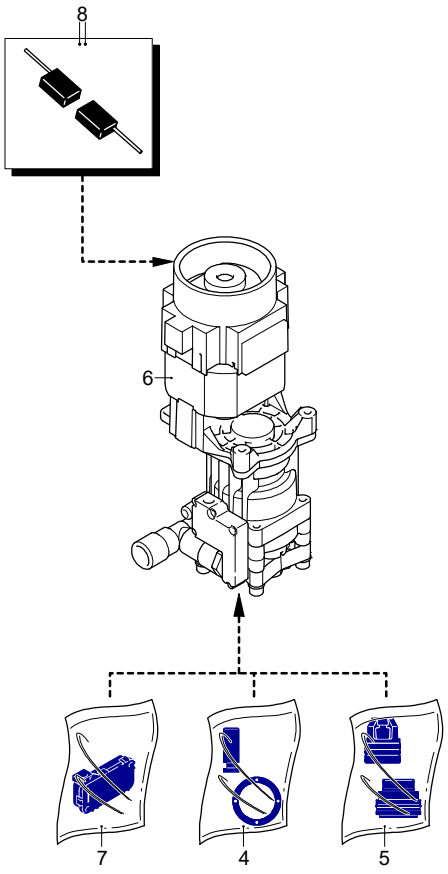

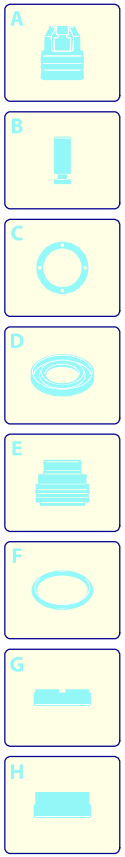

Validity	Pos.	Code	Description	Q
	1	3480170	Brush kit for motor	1
	2	4580960	Electric pump assembly	1
	3	4580950	TSS plug kit	1
	4	3480150	Piston + seals kit	2
	5	3480140	Valves + seals kit	2
	6	4580970	Electric pump assembly	1
	7	4580940	TSS kit	1
	8	3082580	Brush kit for motor	1

UN_CE_2508-BL

Model 5.0 ARBC

Version:

Serial number:

Code: **14793**

20/06/2019

220-230 V - 50/60 Hz | **schuko**

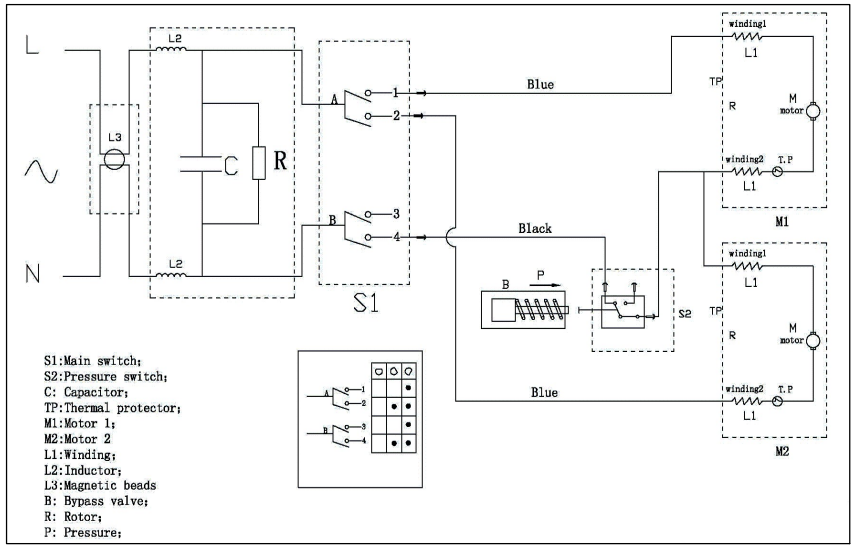

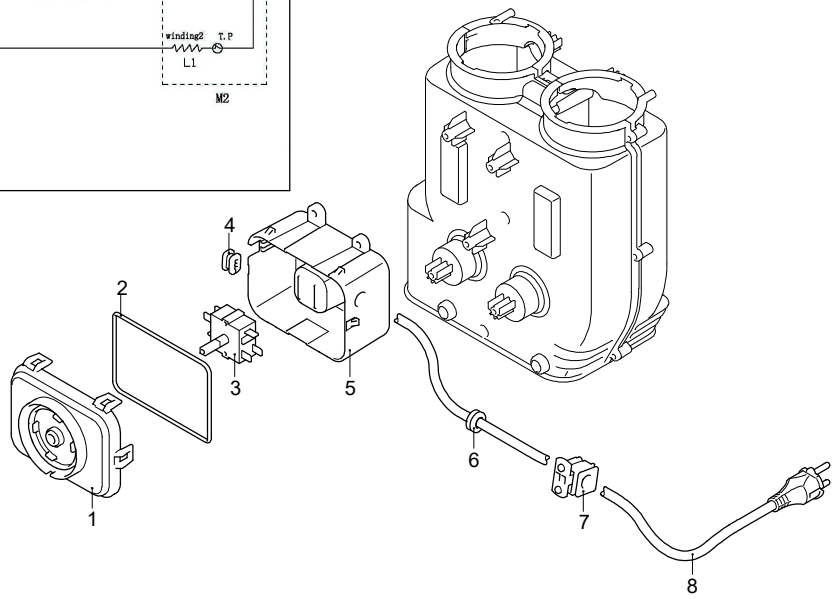

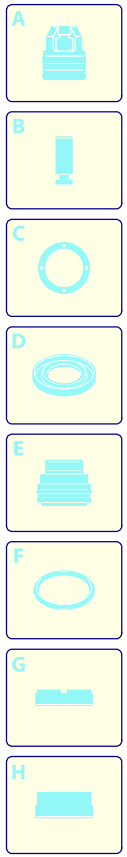

Validity	Pos.	Code	Description	Q
	1	4380840	Cover	1
	2	2180670	O-ring	1
	3	4580050	Switch	1
	4	4580660	Gland	1
	5	4580680	Box	1
	6	2021480	Gland	1
	7	3080580	Cable gland	1
	8	4580930	Cable	1

UN_CE_2509-AL

Model 5.0 ARBC

Version:

Serial number:

Code: **14793**

20/06/2019

220-230 V - 50/60 Hz | **schuko**

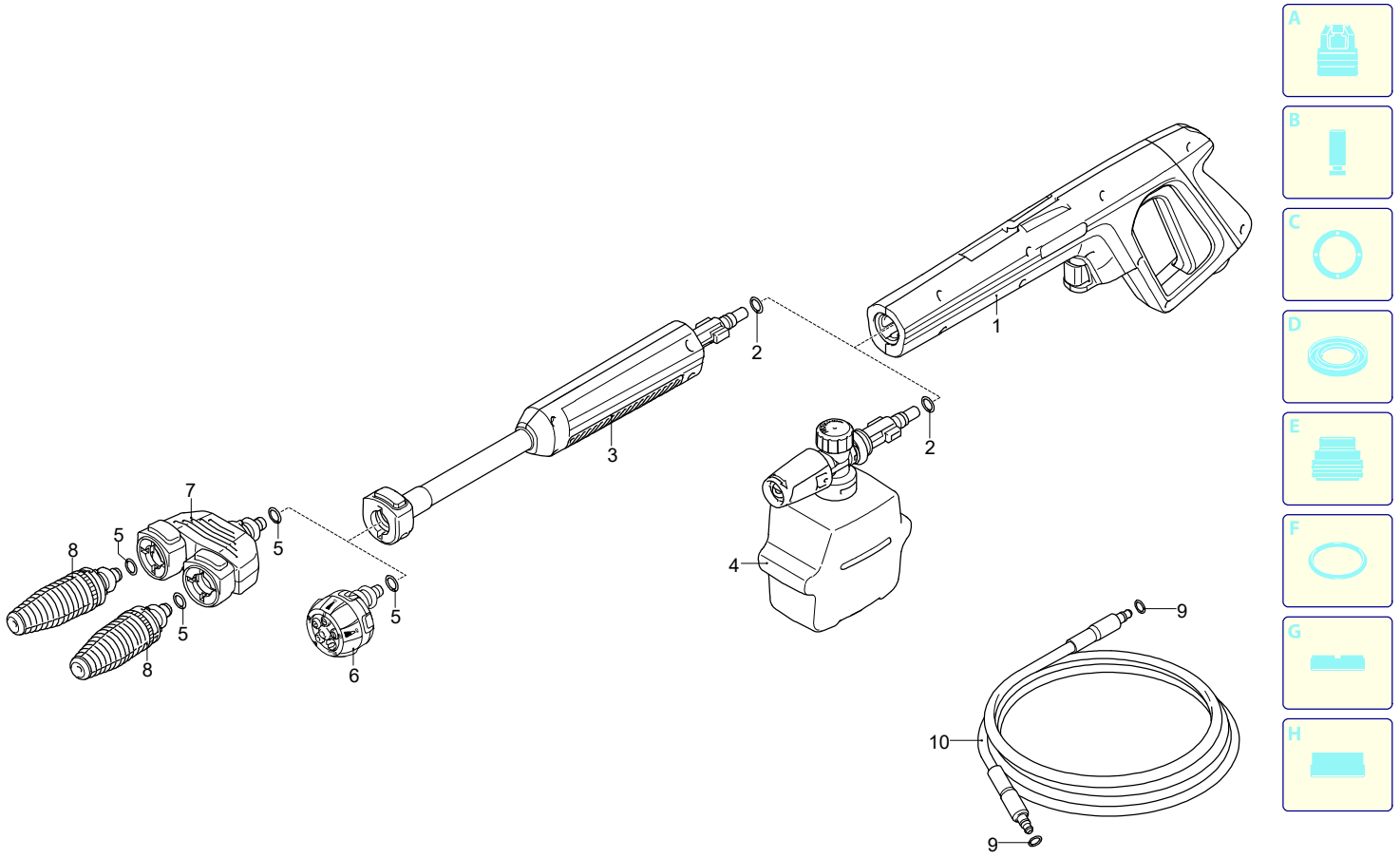

Validity	Pos.	Code	Description	Q
	1	4381482	Gun	1
	2	3083700	O-ring	2
	3	4381492	Extension	1
	4	4580980	Tank	1
	5	3083370	O-ring	4
	6	4102370	Lance head	1
	7	4581010	Lance heads-holder	1
	8	4580990	Rotopower head	2
	9	3083400	O-ring	2
	10	4581030	High pressure hose	1

UN_CE_2597-FL