Model 588

Version:

Serial number:

Code: **13027**

14/07/2014

230 V - 50 Hz | **schuko**

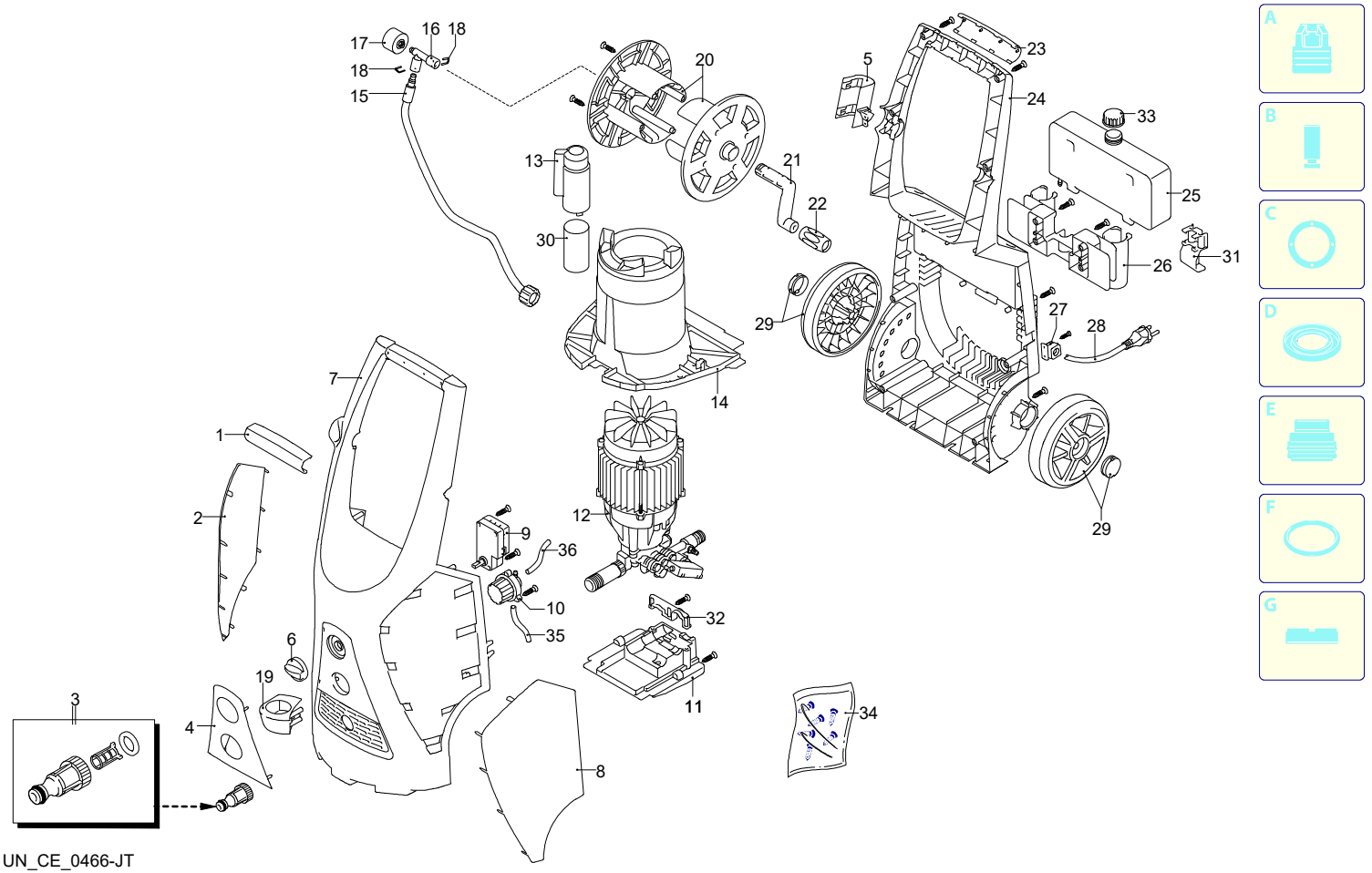

Validity	Pos.	Code	Description	Q
	1	3080810	Knob	1
	2	3080311	Guard	1
	3	3082130	Water coupling kit	1
	4	3400080	Guard	1
	5	3400100	Support	1
	6	3080480	Knob	1
	7	3400051	Blue casing	1
	8	3080301	Guard	1
	9	3082010	Box	1
	10	3082000	Detergent regulator	1
	11	3400030	Support	1
	12	3400320	Electric pump assembly	1
	13	3081630	Capacitor carrier	1
	14	3400040	Conveyor	1
	15	3081640	High pressure hose	1
	16	3080780	Fitting	1
	17	3400630	Pressure gauge	1
	18	3081650	Fork	2
	19	3400111	Support	1
	20	3080390	Plate	2
	21	3080220	Lever	1
	22	3081063	Knob	1
	23	3080820	Knob	1
	24	3080321	Base	1
	25	3080370	Tank	1
	26	3080190	Accessories carrier	1
	27	3080580	Cable gland	1
	28	3441120	Cable	1
	29	3400560	Wheel	2
	30	3081620	Capacitor	1
	31	3081070	Accessories carrier	1
	32	3400090	Support	1
	33	3080380	Plug	1
	34	3400530	Screw kit	1
	35	3081490	Detergent hose	1
	36	3084130	Detergent hose	1

Model 588

Version:

Serial number:

Code: **13027**

14/07/2014

230 V - 50 Hz | **schuko**

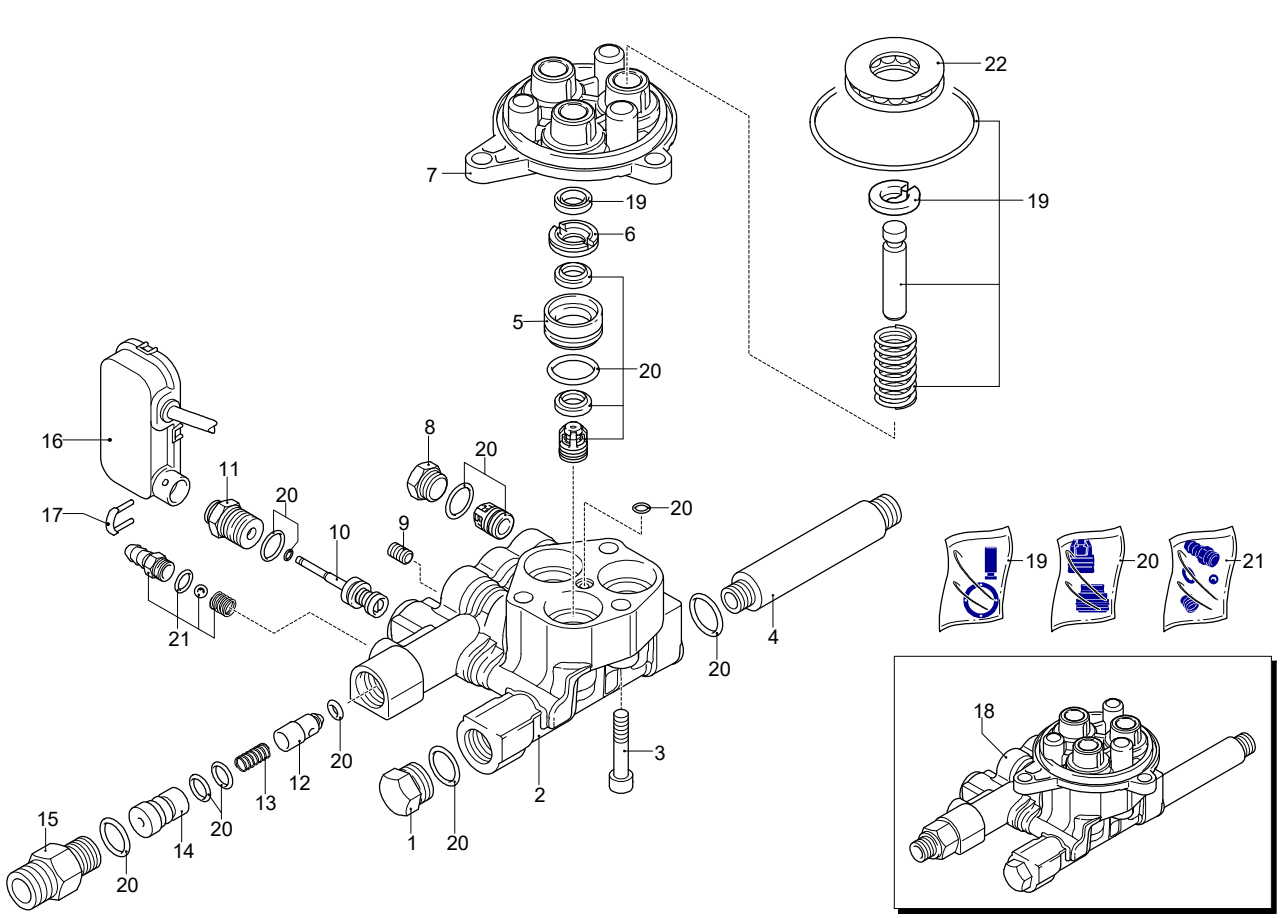

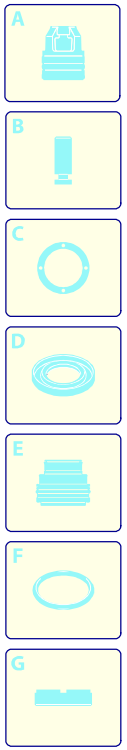

UN_CE_0571-LN

Validity	Pos.	Code	Description	Q
	1	1980740	Plug	1
	2	2900430	Head	1
	3	800220	Screw	3
	4	3400161	Fitting	1
	5	2840550	Bushing	3
	6	2840540	Bushing	3
	7	3400020	Piston guide	1
	8	2840130	Plug	3
	9	2840830	Screw	1
	10	2909005	Spring assembly	1
	11	2900130	Fitting	1
	12	2901070	Shutter	1
	13	3780450	Spring	1
	14	2901110	Injector	1
	15	3400150	Fitting	1
	16	3400400	TSS box assembly	1
	17	2022201	Fork	1
	18	3409401	Pump assembly	1
	19	3400420	Piston + seals kit	1
	20	3400430	Valves + seals kit	1
	21	3400440	Detergent suction kit	1
	22	3400540	Bearing	1

Model 588

Version:

Serial number:

Code: **13027**

14/07/2014

230 V - 50 Hz | **schuko**

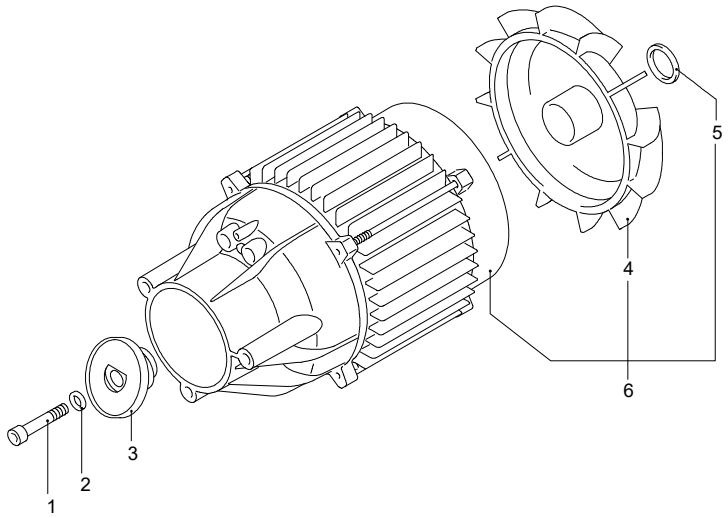

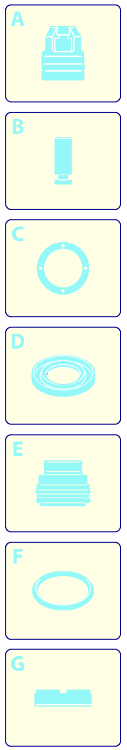

Validity	Pos.	Code	Description	Q
	1	3081950	Screw	1
	2	3081750	Washer	1
	3	3400590	Wobble plate	1
	4	3440370	Fan	1
	5	3441000	Ring	1
	6	3400570	Motor	1

UN_CE_0468-EW

Model 588

Version:

Serial number:

Code: **13027**

14/07/2014

230 V - 50 Hz | **schuko**

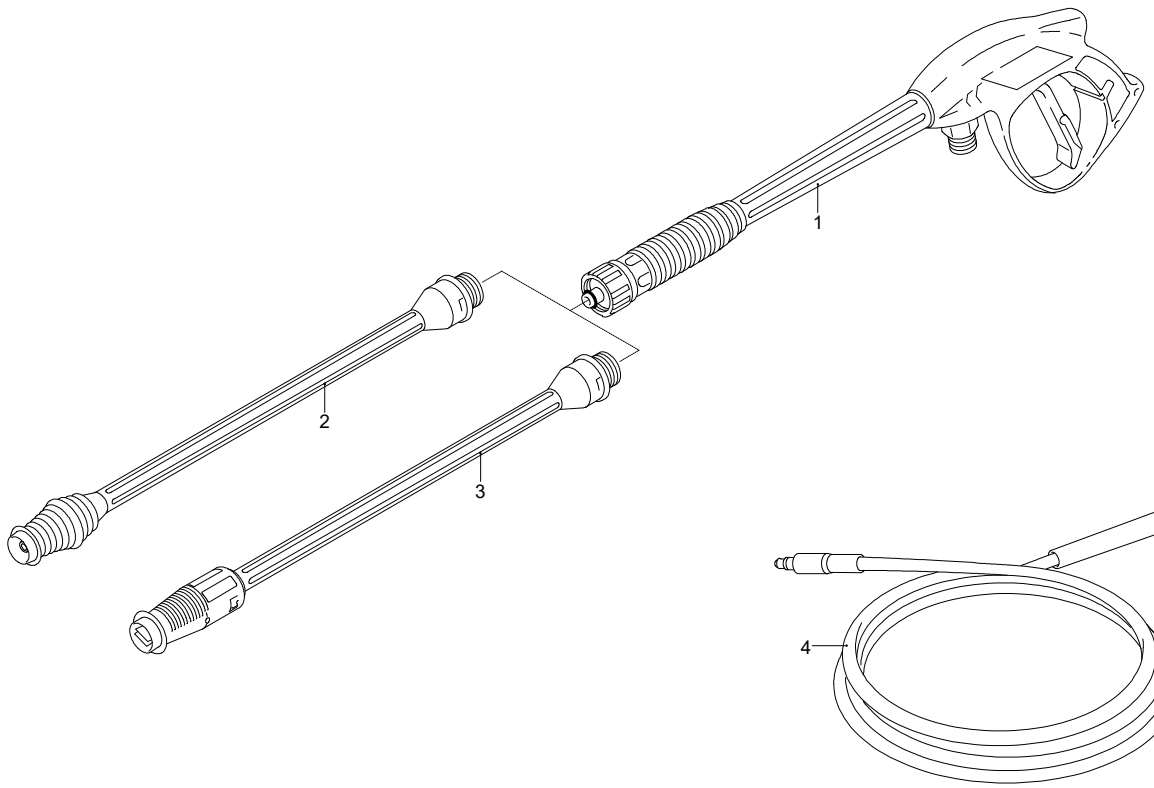

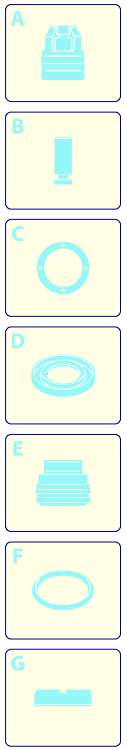

Validity	Pos.	Code	Description	Q
	1	3400260	Gun	1
	2	3400620	Lance+rotopower	1
	3	3400610	Lance+lance head	1
	4	3082100	High pressure hose	1

UN_CE_0469-EW