# Model 5870

Version:

Serial number:

Code: **25673**

**26/04/2018**

**400 V - 50 Hz**

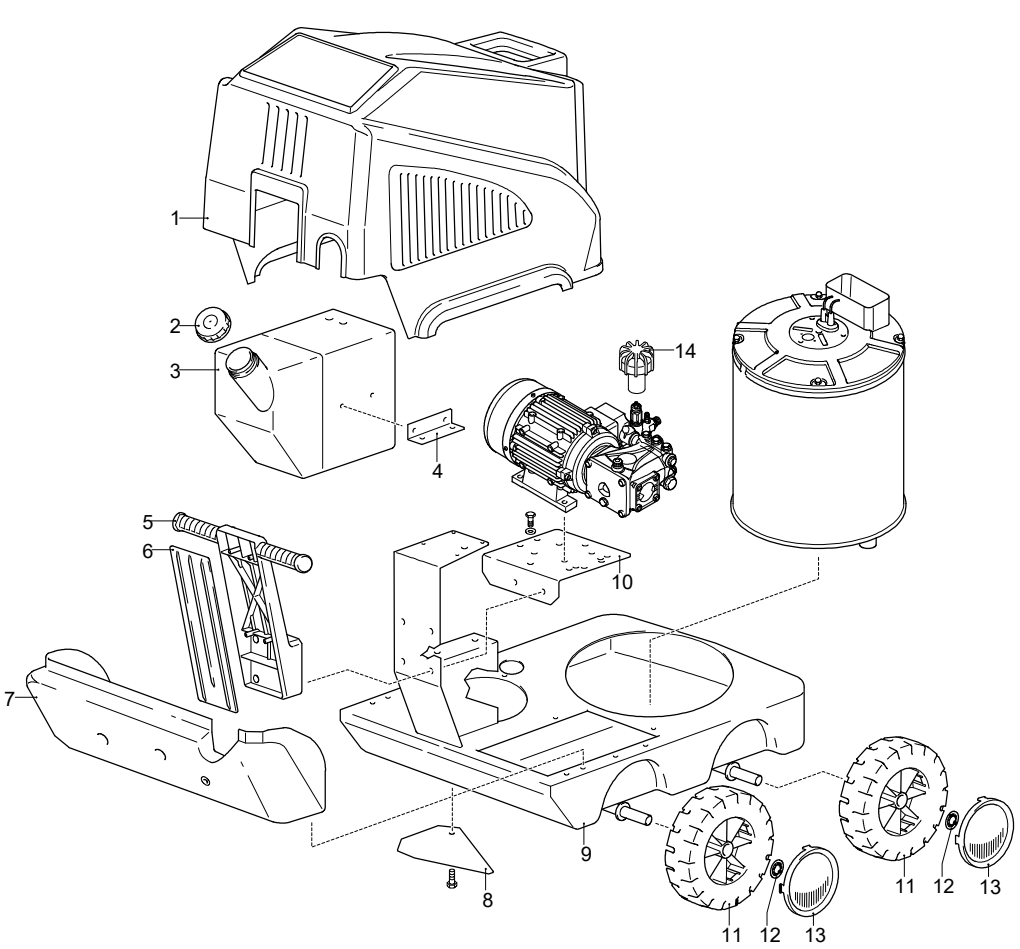


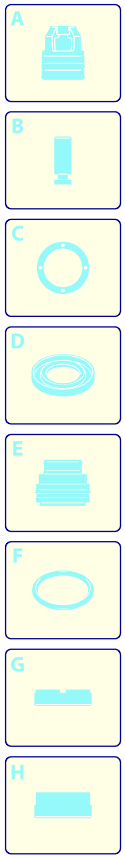


| Validity | Pos. | Code | Description | Q |
|---|---|---|---|---|
| | 1 | 3164540 | Casing | 1 |
| | 2 | 50933 | Plug | 1 |
| | 3 | 3163030 | Tank | 1 |
| | 4 | 3163110 | Plate | 1 |
| | 5 | 3163140 | Handle | 1 |
| | 6 | 3163150 | Cover | 1 |
| | 7 | 3163160 | Cover | 1 |
| | 8 | 3161910 | Plate | 1 |
| | 9 | 3162980 | Frame | 1 |
| | 10 | 3163080 | Support | 1 |
| | 11 | 3160770 | Wheel | 2 |
| | 12 | 3162010 | Ring | 2 |
| | 13 | 3164530 | Guard | 2 |
| | 14 | 2360760 | Knob | 1 |

UN_CE_1610-MR

# Model 5870

Version:

Serial number:

Code: **25673**

**26/04/2018**

**400 V - 50 Hz**

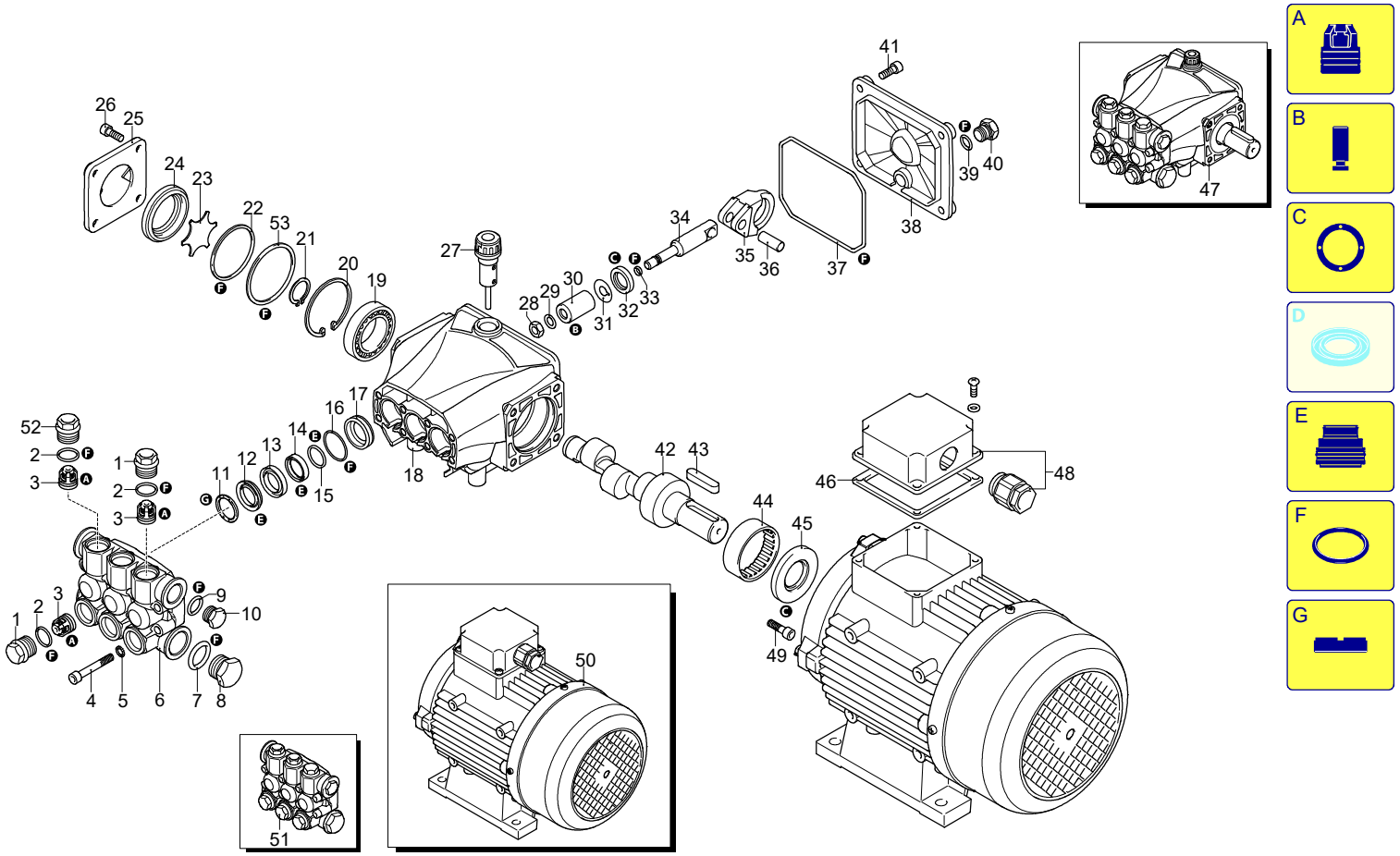


UN_CE_1607-MR

| Validity | Pos. | Code | Description | Q |
|---|---|---|---|---|
| | 1 | 3200110 | Plug | 4 |
| | 2 | 1200690 | O-ring | 6 |
| | 3 | 2769050 | Complete valve | 6 |
| | 4 | 800410 | Screw | 8 |
| | 5 | 1381550 | Washer | 8 |
| | 6 | 3200100 | Head | 1 |
| | 7 | 180101 | O-ring | 1 |
| | 8 | 820361 | Plug | 1 |
| | 9 | 740290 | O-ring | 1 |
| | 10 | 1980740 | Plug | 1 |
| | 11 | 2760220 | Ring | 3 |
| | 12 | 1342761 | Water seal | 3 |
| | 13 | 3200160 | Piston guide | 3 |
| | 14 | 3200690 | Gasket | 3 |
| | 15 | 3200700 | Ring | 3 |
| | 16 | 770590 | O-ring | 3 |
| | 17 | 3200120 | Piston guide | 3 |
| | 18 | 3200010 | Pump body | 1 |
| | 19 | 1780490 | Bearing | 1 |
| | 20 | 1260790 | Ring | 1 |
| | 21 | 1780550 | Ring | 1 |
| | 22 | 395081 | O-ring | 1 |
| | 23 | 3200090 | Plate | 1 |
| | 24 | 3200080 | Level gauge | 1 |
| | 25 | 3200070 | Support | 1 |
| | 26 | 1200430 | Screw | 4 |
| | 27 | 880130 | Plug | 1 |
| | 28 | 1260110 | Nut | 3 |
| | 29 | 1260100 | Washer | 3 |
| | 30 | 1260120 | Piston | 3 |
| | 31 | 1260091 | Plate | 3 |
| | 32 | 1260460 | Oil seal | 3 |
| | 33 | 480480 | O-ring | 3 |
| | 34 | 3200060 | Piston | 3 |
| | 35 | 3200040 | Connecting-rod | 3 |
| | 36 | 1780050 | Pin | 3 |
| | 37 | 2760280 | O-ring | 1 |
| | 38 | 3200030 | Cover | 1 |
| | 39 | 820510 | O-ring | 1 |
| | 40 | 880581 | Plug | 1 |
| | 41 | 3200220 | Screw | 4 |
| | 42 | 3200290 | Shaft | 1 |
| | 43 | 3200230 | Key | 1 |
| | 44 | 1321190 | Bearing | 1 |
| | 45 | 1260750 | Ring | 1 |
| | 46 | 50068 | Gasket | 1 |
| | 47 | 23672 | Pump assembly | 1 |
| | 48 | 50069 | Box | 1 |
| | 49 | 1200430 | Screw | 4 |
| | 50 | 44838 | Motor | 1 |
| | 51 | 3209201 | Head assembly | 1 |
| | 52 | 3200430 | Plug | 2 |
| | 53 | 3201860 | Ring | 1 |
| | A | 2186 | Valve kit | 1 |
| | B | 42467 | Piston kit | 1 |
| | C | 42468 | Oil seal kit | 1 |
| | E | 42469 | Water seal kit | 1 |
| | F | 42470 | Gasket kit | 1 |
| | G | 2745 | Support ring kit | 1 |

# Model 5870

Version:

Serial number:

Code: **25673**

26/04/2018

**400 V - 50 Hz**

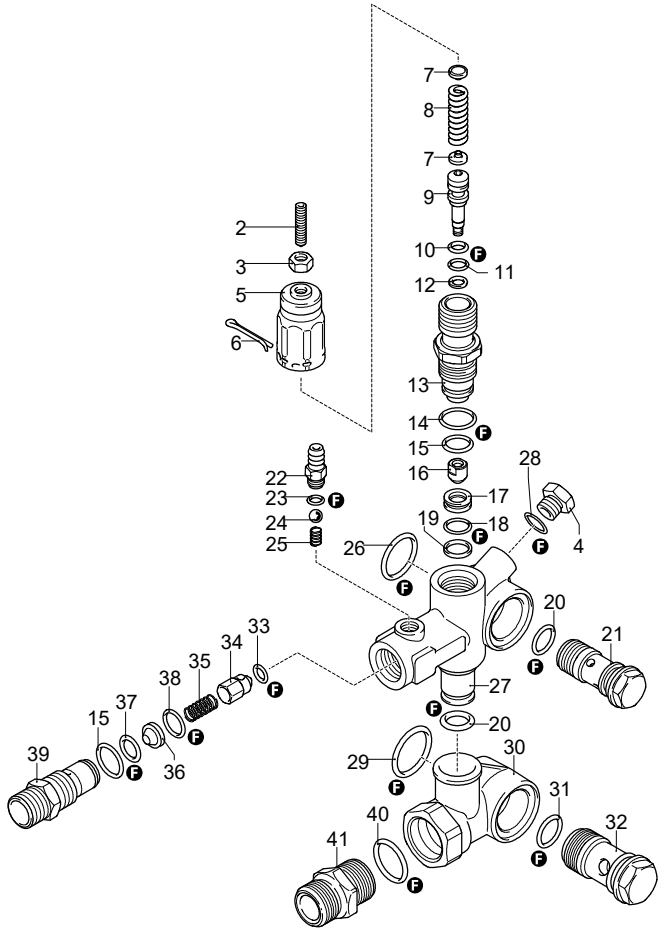


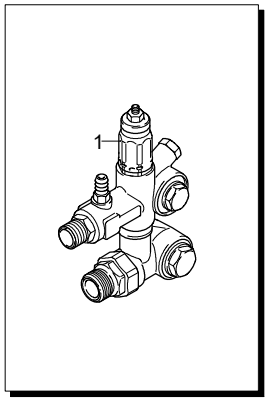


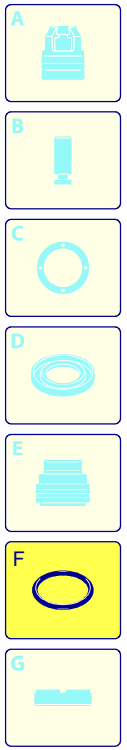


| Validity | Pos. | Code | Description | Q |
|---|---|---|---|---|
| | 1 | 25184 | Complete valve | 1 |
| | 2 | 2840970 | Screw | 1 |
| | 3 | 1060120 | Nut | 1 |
| | 4 | 3740100 | Plug | 1 |
| | 5 | 2500540 | Insert | 1 |
| | 6 | 2500550 | Split pin | 1 |
| | 7 | 1980220 | Wobble plate | 2 |
| | 8 | 2760410 | Spring | 1 |
| | 9 | 2760400 | Piston | 1 |
| | 10 | 2260100 | O-ring | 1 |
| | 11 | 660190 | O-ring | 1 |
| | 12 | 2760210 | Ring | 1 |
| | 13 | 2760570 | Guide | 1 |
| | 14 | 1200690 | O-ring | 1 |
| | 15 | 394280 | O-ring | 5 |
| | 16 | 2260070 | Shutter | 1 |
| | 17 | 2760980 | Seat | 1 |
| | 18 | 770140 | O-ring | 1 |
| | 19 | 2760640 | Ring | 1 |
| | 20 | 390080 | O-ring | 2 |
| | 21 | 1540272 | Screw | 1 |
| | 22 | 1982520 | Hose tail | 1 |
| | 23 | 480480 | O-ring | 1 |
| | 24 | 1250280 | Ball | 1 |
| | 25 | 1560520 | Spring | 1 |
| | 26 | 2260190 | O-ring | 1 |
| | 27 | 3740010 | Valve body | 1 |
| | 28 | 600180 | O-ring | 1 |
| | 29 | 1540630 | O-ring | 1 |
| | 30 | 3740020 | Body | 1 |
| | 31 | 880270 | O-ring | 1 |
| | 32 | 2260420 | Screw | 1 |
| | 33 | 2101770 | O-ring | 1 |
| | 34 | 2760131 | Shutter | 1 |
| | 35 | 2760200 | Spring | 1 |
| | 36 | 2760120 | Injector | 1 |
| | 37 | 1470210 | O-ring | 1 |
| | 38 | 2760270 | O-ring | 1 |
| | 39 | 2760230 | Fitting | 1 |
| | 40 | 480440 | O-ring | 1 |
| | 41 | 3600760 | Fitting | 1 |
| | F | 42780 | Gasket kit | 1 |

UN_CE_1612-MR

# Model 5870

Version:

Serial number:

Code: **25673**

**26/04/2018**

**400 V - 50 Hz**

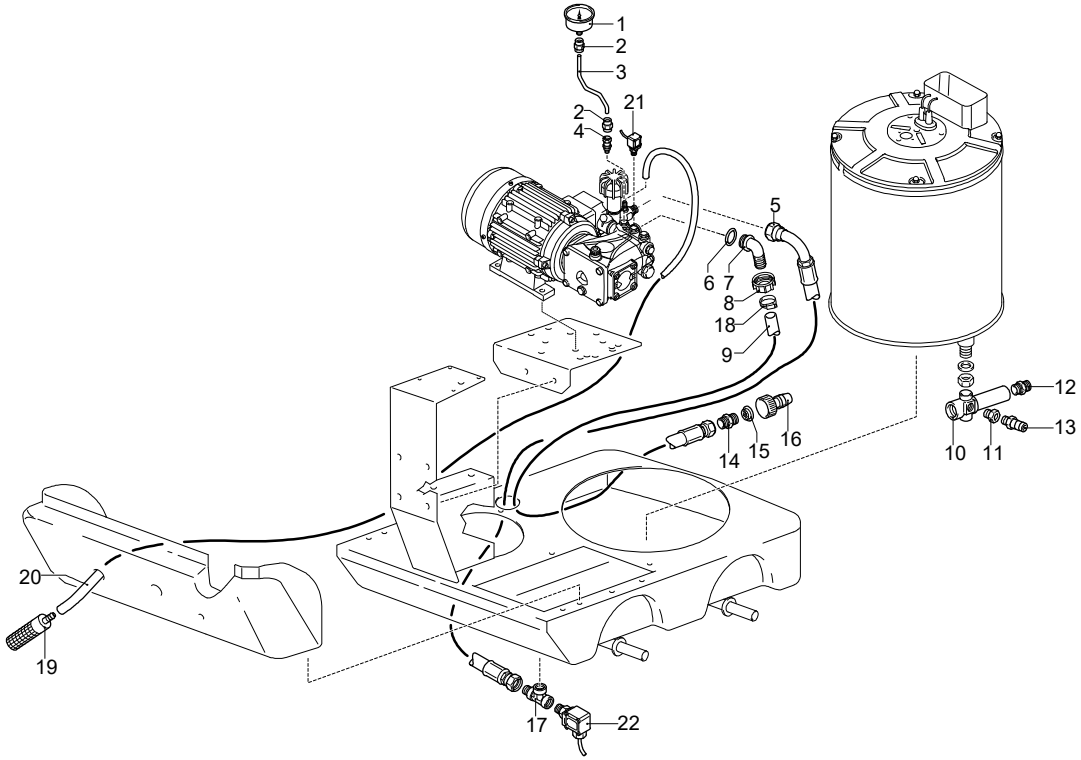


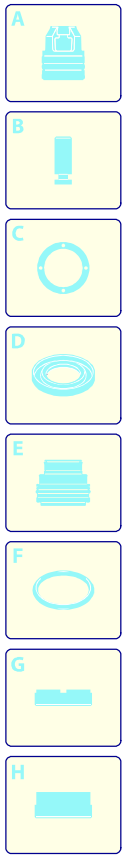


| Validity | Pos. | Code | Description | Q |
|---|---|---|---|---|
| | 1 | 3163130 | Pressure gauge | 1 |
| | 2 | 3161250 | Fitting | 2 |
| | 3 | 3163090 | Pipe | 1 |
| | 4 | 3164390 | Fitting | 1 |
| | 5 | 3161320 | Pipe | 1 |
| | 6 | 3161030 | Gasket | 1 |
| | 7 | 3161120 | Fitting | 1 |
| | 8 | 3160490 | Ring nut | 1 |
| | 9 | 3161280 | Pipe | 1 |
| | 10 | 3161160 | Fitting | 1 |
| | 11 | 3161240 | Fitting | 1 |
| | 12 | 3161150 | Fitting | 1 |
| | 13 | 3161400 | Safety valve | 1 |
| | 14 | 3160480 | Fitting | 1 |
| | 15 | 50713 | Filter | 1 |
| | 16 | 3163100 | Fitting | 1 |
| | 17 | 3160510 | Fitting | 1 |
| | 18 | 1140690 | Clamp | 1 |
| | 19 | 1341030 | Filter | 1 |
| | 20 | 3780380 | Detergent hose | 1 |
| | 21 | 3164440 | Pressure switch | 1 |
| | 22 | 3161080 | Pressure switch | 1 |

UN_CE_1611-DQ

# Model 5870

Version:

Serial number:

Code: **25673**

26/04/2018

**400 V - 50 Hz**

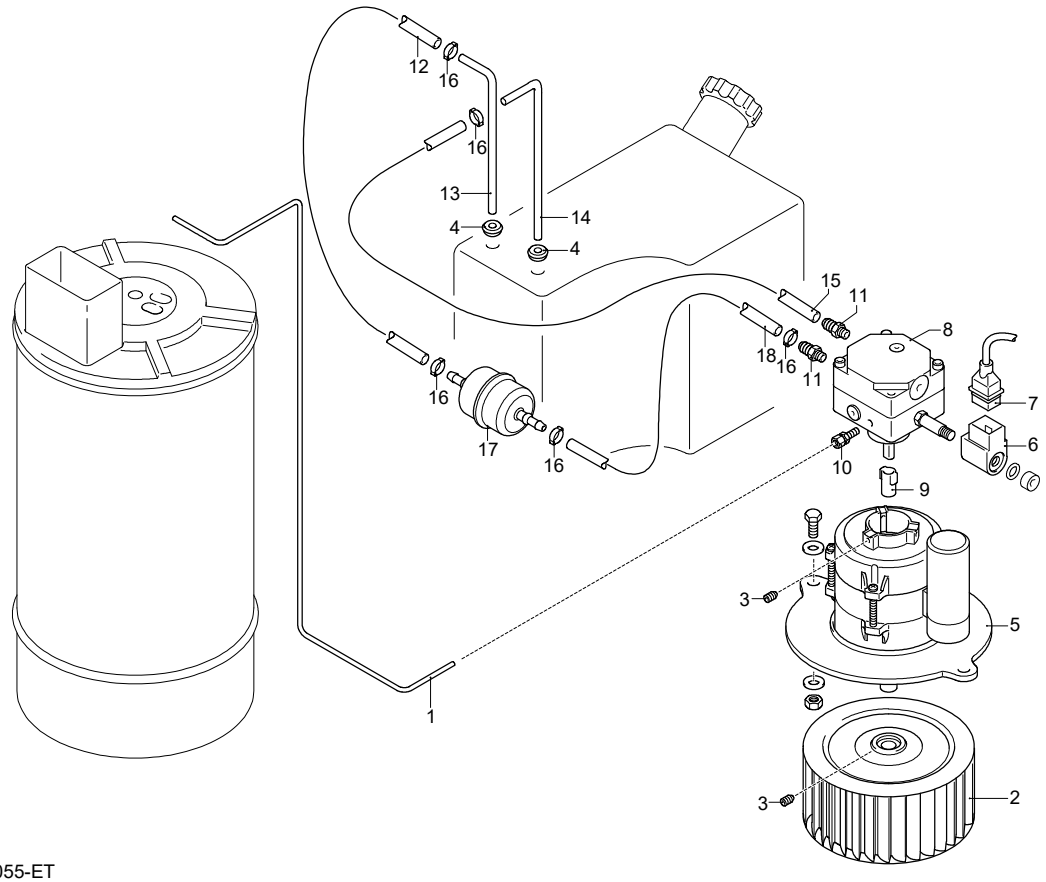


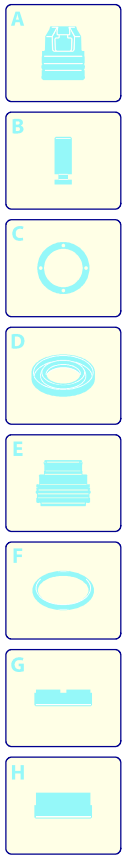


| Validity | Pos. | Code | Description | Q |
|---|---|---|---|---|
| | 1 | 3163190 | Pipe | 1 |
| | 2 | 3161820 | Fan | 1 |
| | 3 | 3163540 | Screw | 1 |
| | 4 | 3161050 | Gland | 2 |
| | 5 | 3163490 | Motor | 1 |
| | 6 | 3160320 | Solenoid | 1 |
| | 7 | 3161440 | Cable | 1 |
| | 8 | 3163040 | Pump | 1 |
| | 9 | 3160300 | Coupling | 1 |
| | 10 | 3160330 | Fitting | 1 |
| | 11 | 3160340 | Hose tail | 2 |
| | 12 | 3161590 | Pipe | 1 |
| | 13 | 3163780 | Pipe | 1 |
| | 14 | 3161660 | Pipe | 1 |
| | 15 | 3161580 | Pipe | 1 |
| | 16 | 3162060 | Clamp | 5 |
| | 17 | 3163050 | Filter | 1 |
| | 18 | 3161600 | Pipe | 1 |

UN_CE_1055-ET

# Model 5870

Version:

Serial number:

Code: **25673**

**26/04/2018**

**400 V - 50 Hz**

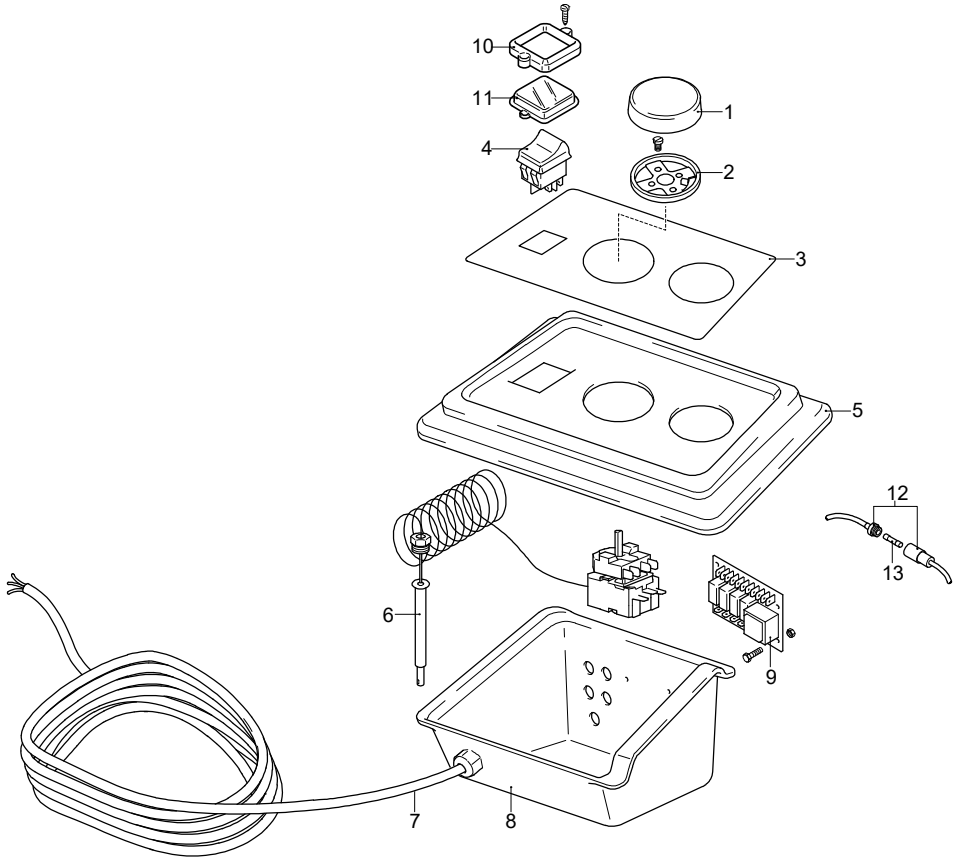


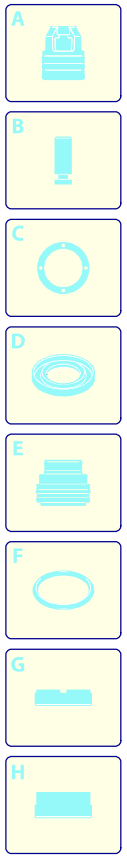


| Validity | Pos. | Code | Description | Q |
|---|---|---|---|---|
| | 1 | 3161960 | Knob | 1 |
| | 2 | 3161990 | Support | 1 |
| | 3 | 3163120 | Plate | 1 |
| | 4 | 3162810 | Switch | 1 |
| | 5 | 3163010 | Support | 1 |
| | 6 | 50720 | Thermostat | 1 |
| | 7 | 1700640 | Cable | 1 |
| | 8 | 3163000 | Box | 1 |
| | 9 | 3160900 | Board - ALB 012 | 1 |
| | 10 | 3162870 | Guard | 1 |
| | 11 | 3162860 | Guard | 1 |
| | 12 | 3163720 | Fuse holder | 1 |
| | 13 | 3160920 | Fuse | 1 |

UN_CE_2303-KN

# Model 5870

Version:

Serial number:

Code: **25673**

**26/04/2018**

**400 V - 50 Hz**

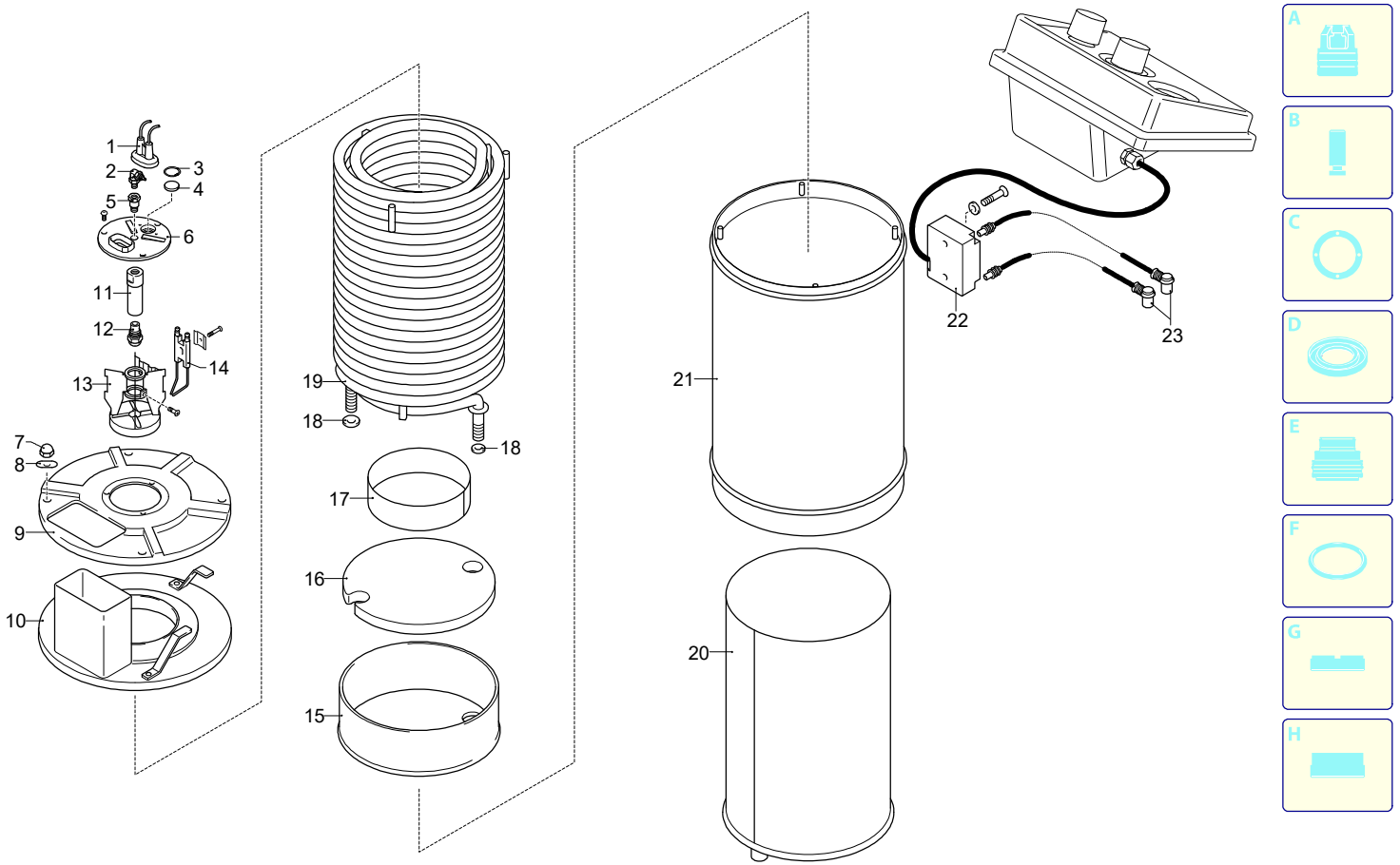


| Validity | Pos. | Code | Description | Q |
|---|---|---|---|---|
| | 1 | 3162370 | Guard | 1 |
| | 2 | 3161100 | Fitting | 1 |
| | 3 | 3162030 | Ring | 1 |
| | 4 | 3161860 | Glass | 1 |
| | 5 | 3161230 | Fitting | 1 |
| | 6 | 3161840 | Plate | 1 |
| | 7 | 3163960 | Nut | 4 |
| | 8 | 3163940 | Washer | 4 |
| | 9 | 3161790 | Cover | 1 |
| | 10 | 3161780 | Cover | 1 |
| | 11 | 3161870 | Nozzle holder | 1 |
| | 12 | 3161710 | Nozzle | 1 |
| | 13 | 3161560 | Support | 1 |
| | 14 | 3161890 | Electrode | 1 |
| | 15 | 3161770 | Cover | 1 |
| | 16 | 3161830 | Plate | 1 |
| | 17 | 3161430 | Ring | 1 |
| | 18 | 3162040 | Washer | 2 |
| | 19 | 3161750 | Pipe coil | 1 |
| | 20 | 3161450 | Boiler | 1 |
| | 21 | 3163180 | Body | 1 |
| | 22 | 50717 | Danfoss/Fida transformer | 1 |
| | 23 | 3163210 | Cable | 1 |

UN_CE_1056-FP

# Model 5870

Version:

Serial number:

Code: **25673**

**26/04/2018**

**400 V - 50 Hz**

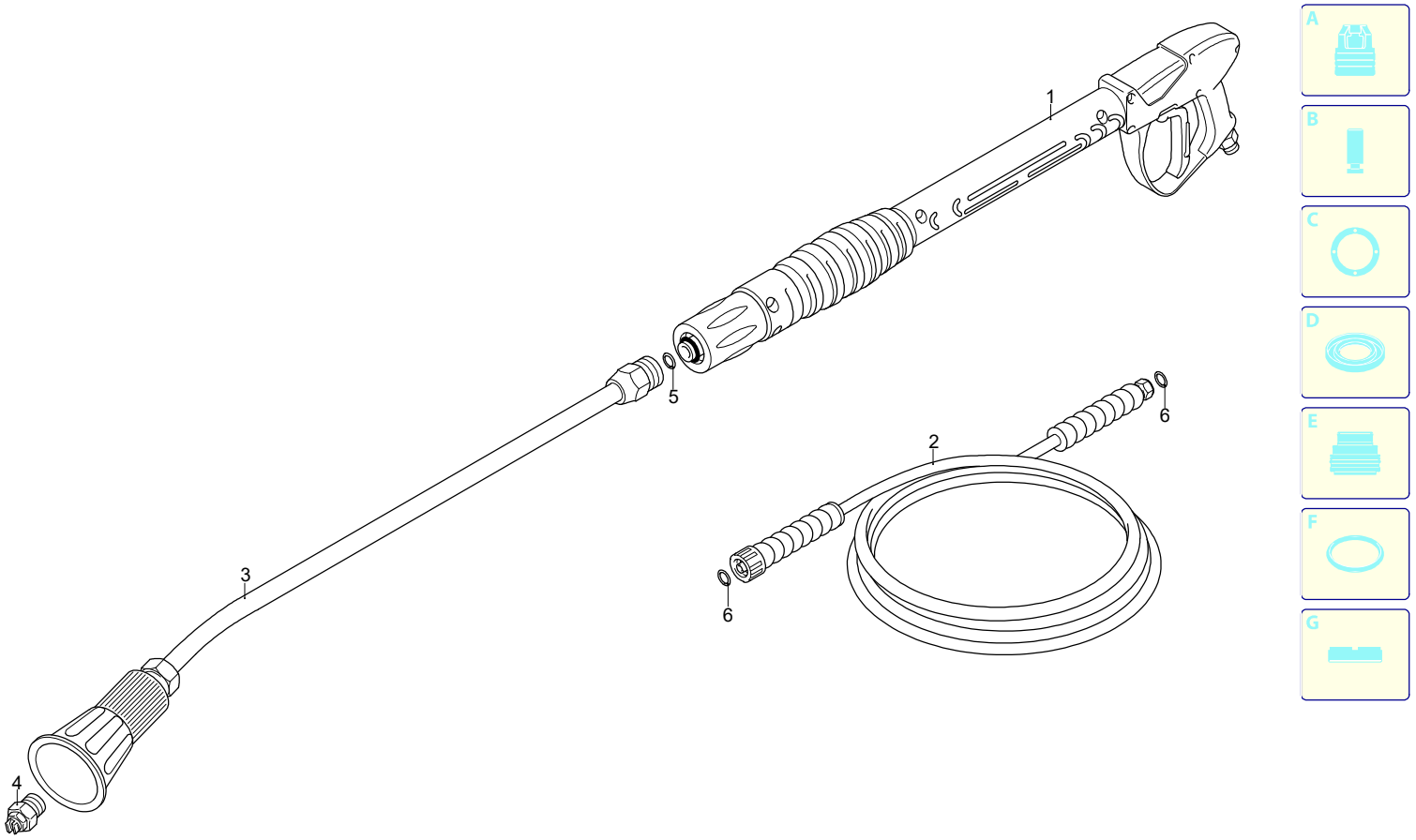





| Validity | Pos. | Code | Description | Q |
|---|---|---|---|---|
| | 1 | 41847 | Gun | 1 |
| | 2 | 3160160 | High pressure hose | 1 |
| | 3 | 40826 | Lance | 1 |
| | 4 | 3095 | Nozzle | 1 |
| | 5 | 391000 | O-ring | 1 |
| | 6 | 2000570 | O-ring | 2 |

UN_CE_0739-EP