Model 586

Version:

Serial number:

Code: **13721**

14/12/2017

schuko

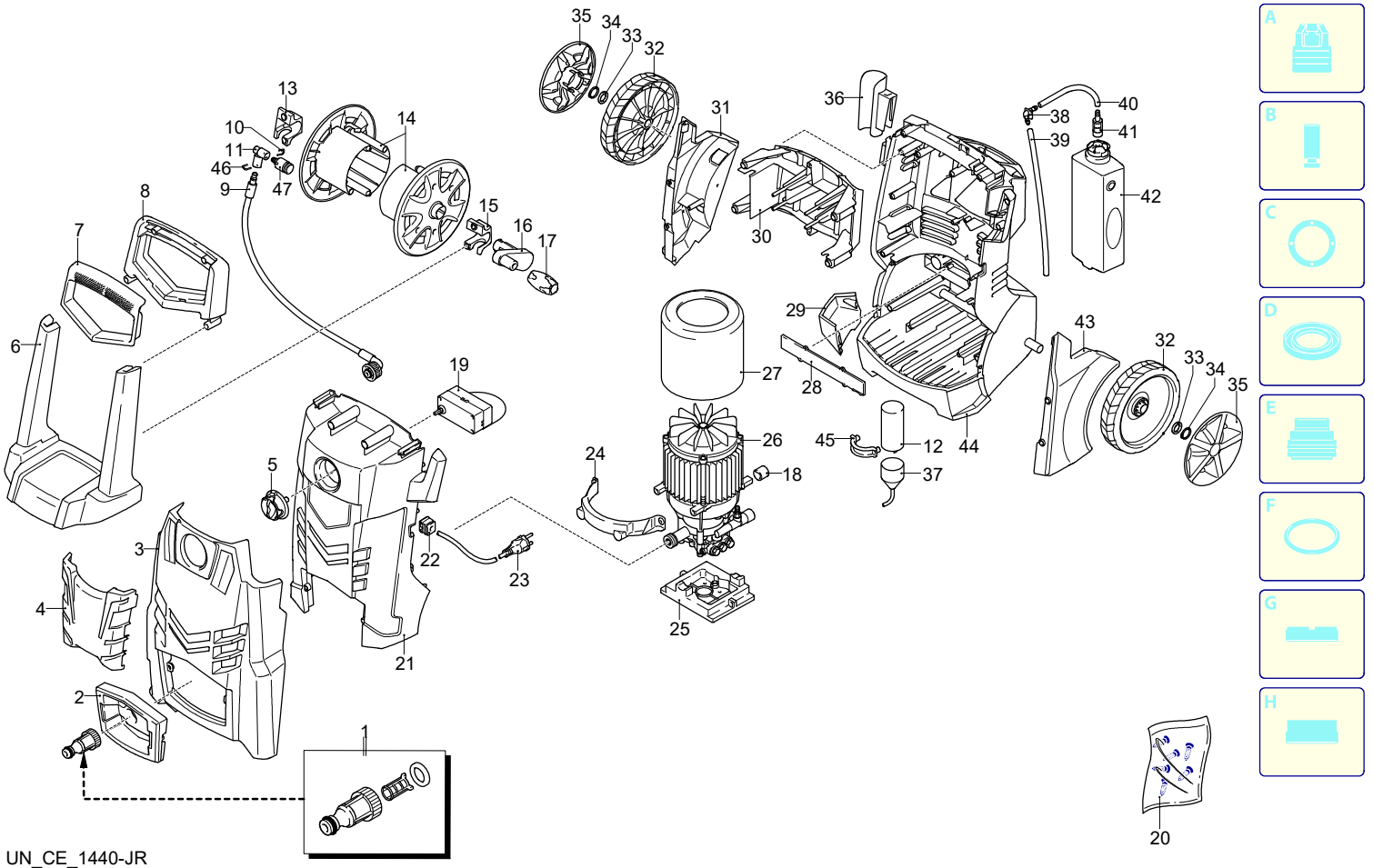

Validity	Pos.	Code	Description	Q
	1	3082130	Water coupling kit	1
	2	4100430	Guard	1
	3	4100361	Guard	1
	4	4100550	Guard	1
	5	4100500	Knob	1
	6	4100270	Handle	1
	7	4100381	Knob	1
	8	4100370	Handle	1
	9	4101120	High pressure hose	1
	10	3081650	Fork	2
	11	4101250	Fitting	1
	12	3401010	Capacitor	1
	13	4100340	Bracket	1
	14	4101040	Plate	2
	15	4100330	Bracket	1
	16	4101050	Lever	1
	17	4100560	Knob	1
	18	4101090	Rubber foot	2
	19	4102010	Switch	1
	20	4101110	Screw kit	1
	21	4100221	Casing	1
	22	3080580	Cable gland	1
	23	3441120	Cable	1
	24	3440120	Bracket	1
	25	3441170	Support	1
	26	4101440	Electric pump assembly	1
	27	3440130	Fan cowling	1
	28	4100930	Guard	1
	29	4100640	Support	1
	30	4101000	Support	1
	31	4100410	Guard	1
	32	4100010	Wheel	2
	33	4101020	Washer	2
	34	4101010	Lock	2
	35	4100510	Guard	2
	36	4100630	Support	1
	37	4101080	Connector	1
	38	4100960	Fitting	1
	39	4100970	Pipe	1
	40	4100950	Pipe	1
	41	3440720	Filter	1
	42	3440710	Tank	1
	43	4100420	Guard	1
	44	4100600	Base	1
	45	4101450	Bracket	1
	46	4101520	Fork	1
	47	4101030	Fitting	1

Model 586

Version:

Serial number:

Code: **13721**

14/12/2017

schuko

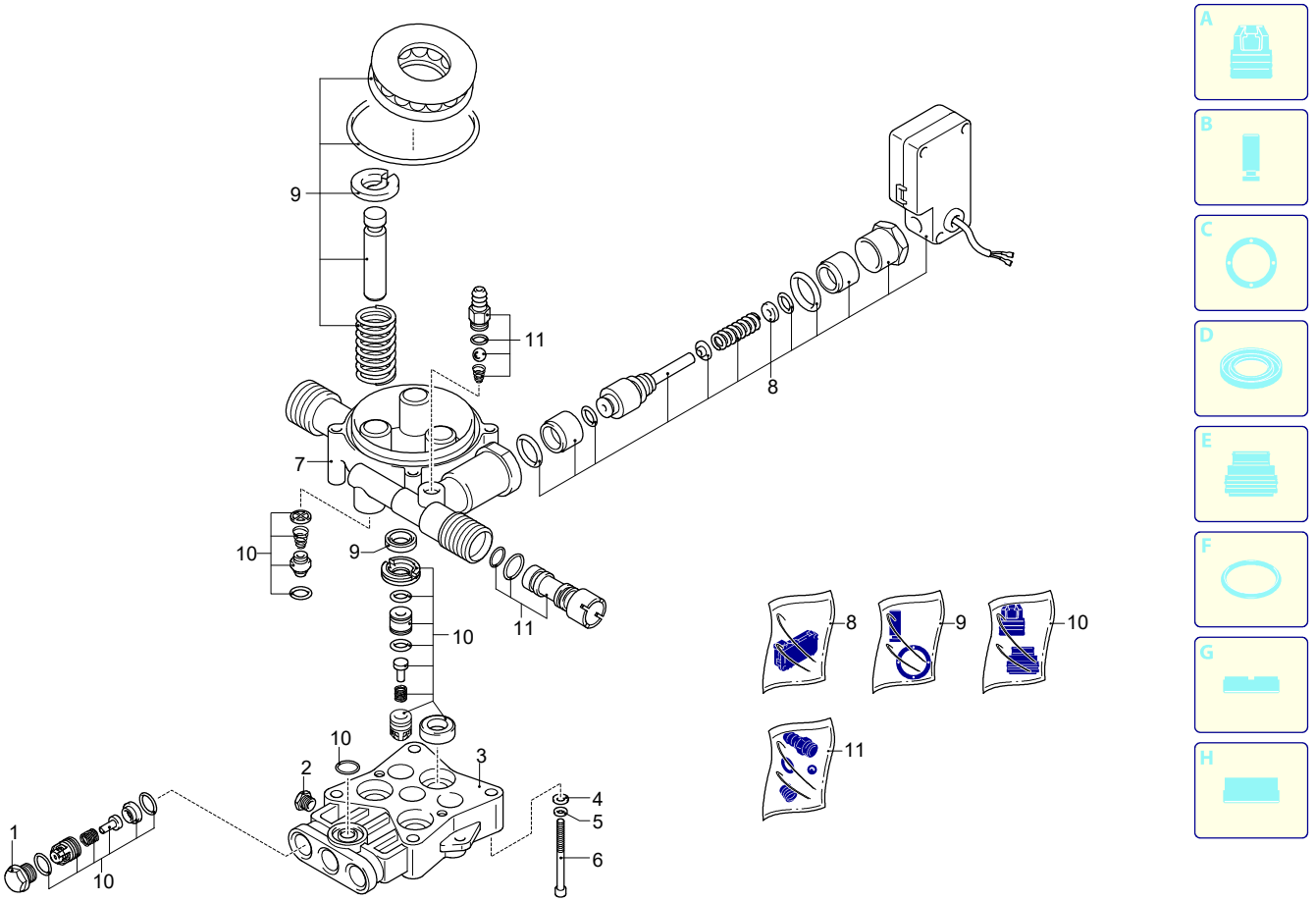

UN_CE_1377-JS

Validity	Pos.	Code	Description	Q
	1	4101480	Plug	3
	2	4101490	Screw	1
	3	4101500	Head	1
	4	3081760	Washer	4
	5	3081750	Washer	4
	6	3081740	Screw	4
	7	3083230	Pump body	1
	8	4101460	TSS kit	1
	9	3440570	Piston + seals kit	1
	10	4102110	Valves + seals kit	1
	11	4101470	Detergent suction kit	1

Model 586

Version:

Serial number:

Code: **13721**

14/12/2017

schuko

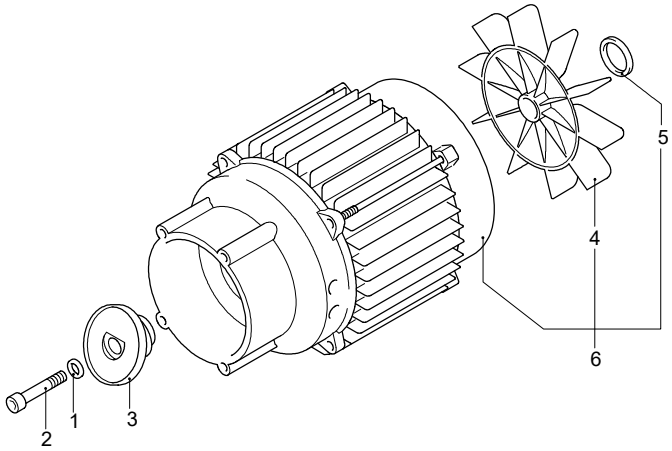

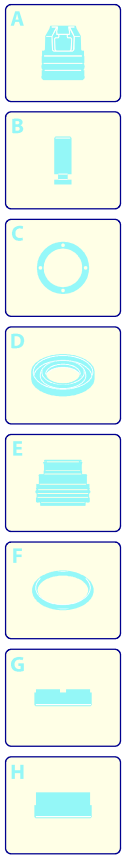

Validity	Pos.	Code	Description	Q
	1	3081750	Washer	1
	2	3081950	Screw	1
	3	3400590	Wobble plate	1
	4	3440370	Fan	1
	5	3441000	Ring	1
	6	4101510	Motor	1

UN_CE_0591-JS

Model 586

Version:

Serial number:

Code: **13721**

14/12/2017

schuko

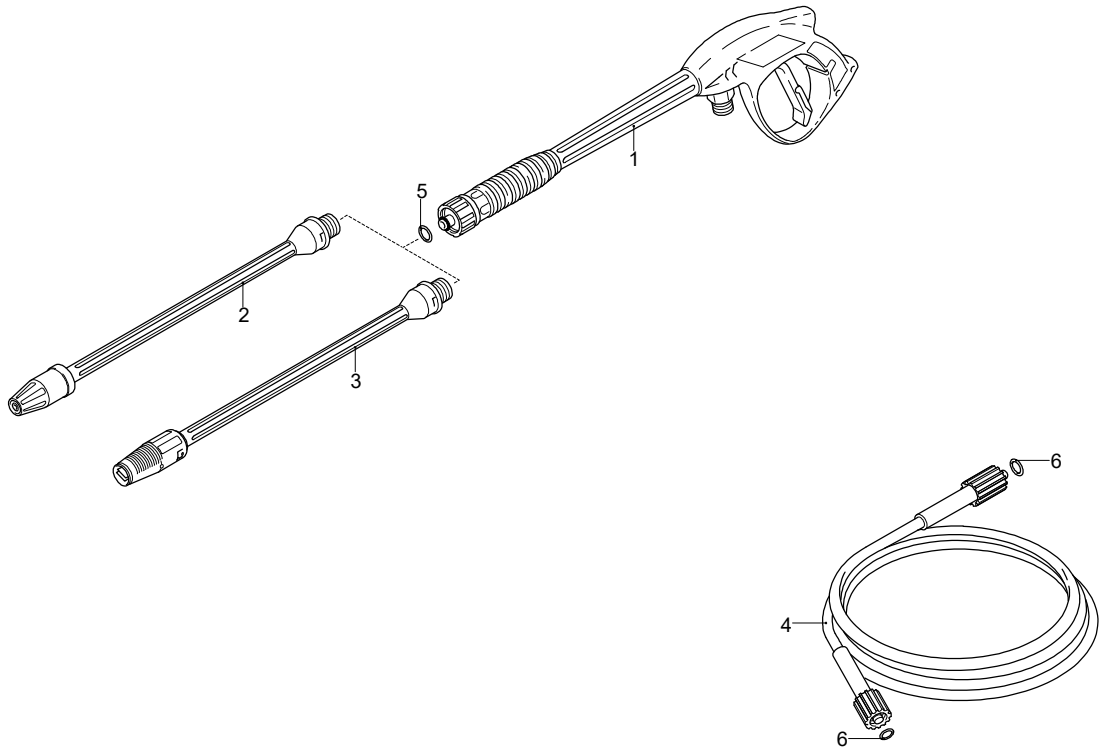

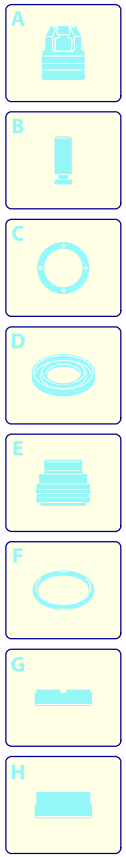

Validity	Pos.	Code	Description	Q
	1	3900180	Gun	1
	2	3900230	Lance+rotopower	1
	3	3900220	Lance+lance head	1
	4	3083830	High pressure hose	1
	5	3083690	O-ring	1
	6	3083380	O-ring	2

UN_CE_1434-DP