Model 5850

Version:

Serial number:

Code: **25672**

26/04/2018

230 V - 50 Hz | **schuko**

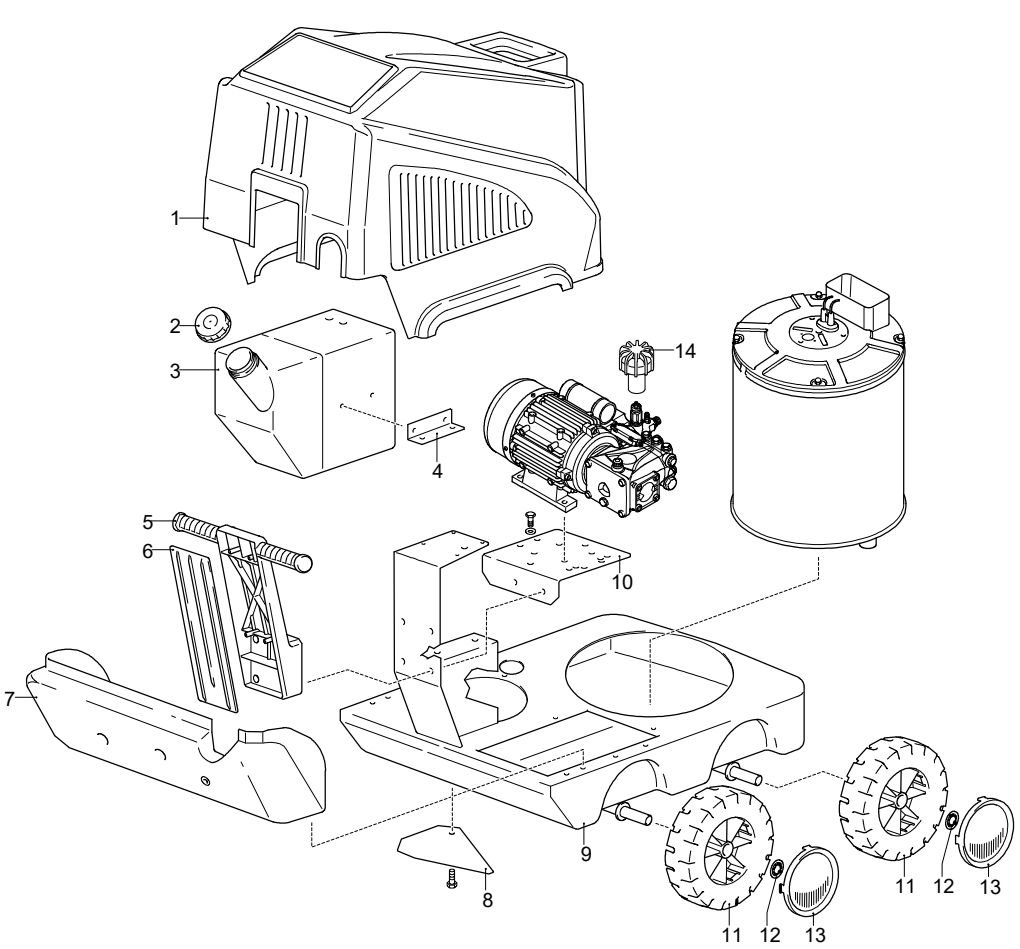

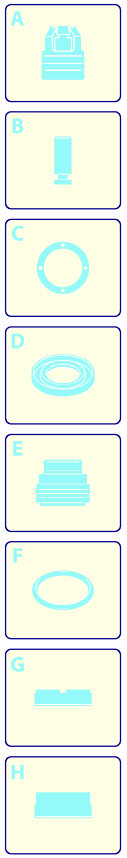

Validity	Pos.	Code	Description	Q
	1	3164540	Casing	1
	2	50933	Plug	1
	3	3163030	Tank	1
	4	3163110	Plate	1
	5	3163140	Handle	1
	6	3163150	Cover	1
	7	3163160	Cover	1
	8	3161910	Plate	1
	9	3162980	Frame	1
	10	3163080	Support	1
	11	3160770	Wheel	2
	12	3162010	Ring	2
	13	3164530	Guard	2
	14	2360760	Knob	1

UN_CE_1606-MR

Model 5850

Version:

Serial number:

Code: **25672**

26/04/2018

230 V - 50 Hz | **schuko**

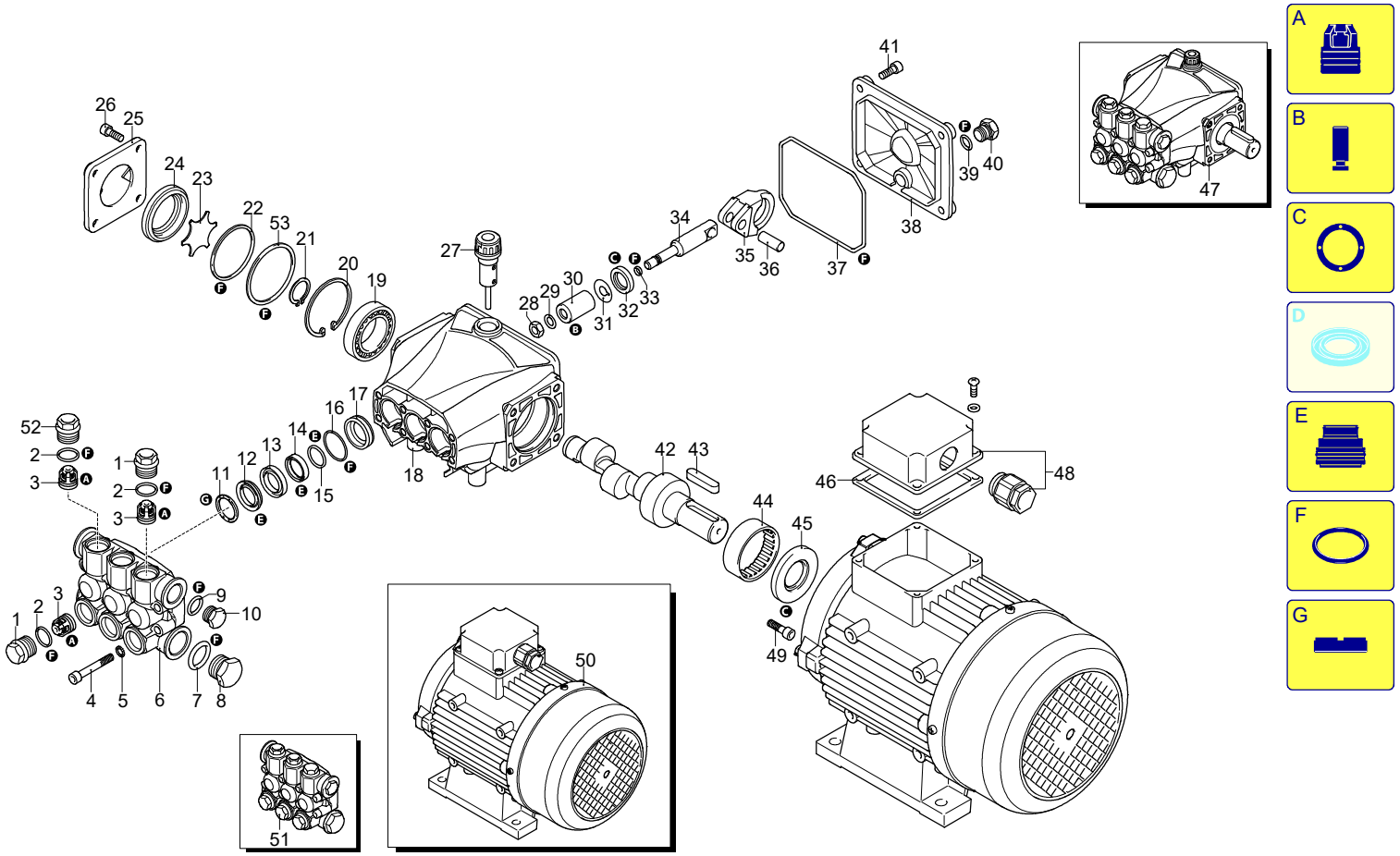

UN_CE_1607-MR

Validity	Pos.	Code	Description	Q
	1	3200110	Plug	4
	2	1200690	O-ring	6
	3	2769050	Complete valve	6
	4	800410	Screw	8
	5	1381550	Washer	8
	6	3200020	Head	1
	7	180101	O-ring	1
	8	820361	Plug	1
	9	740290	O-ring	1
	10	1980740	Plug	1
	11	1780140	Ring	3
	12	1780720	Water seal	3
	13	3200130	Piston guide	3
	14	3200142	Gasket	3
	15	3200260	Ring	3
	16	770590	O-ring	3
	17	3200120	Piston guide	3
	18	3200010	Pump body	1
	19	1780490	Bearing	1
	20	1260790	Ring	1
	21	1780550	Ring	1
	22	395081	O-ring	1
	23	3200090	Plate	1
	24	3200080	Level gauge	1
	25	3200070	Support	1
	26	1200430	Screw	4
	27	880130	Plug	1
	28	1260110	Nut	3
	29	1260100	Washer	3
	30	1260210	Piston	3
	31	1260091	Plate	3
	32	1260460	Oil seal	3
	33	480480	O-ring	3
	34	3200060	Piston	3
	35	3200040	Connecting-rod	3
	36	1780050	Pin	3
	37	2760280	O-ring	1
	38	3200030	Cover	1
	39	820510	O-ring	1
	40	880581	Plug	1
	41	3200220	Screw	4
	42	3200300	Shaft	1
	43	3200230	Key	1
	44	1321190	Bearing	1
	45	1260750	Ring	1
	46	50068	Gasket	1
	47	23384	Pump assembly	1
	48	50069	Box	1
	49	1200430	Screw	4
	50	44837	Motor	1
	51	3209200	Head assembly	1
	52	3200430	Plug	2
	53	3201860	Ring	1
	A	2186	Valve kit	1
	B	42467	Piston kit	1
	C	42468	Oil seal kit	1
	E	42469	Water seal kit	1
	F	42470	Gasket kit	1
	G	2745	Support ring kit	1

Model 5850

Version:

Serial number:

Code: **25672**

26/04/2018

230 V - 50 Hz | **schuko**

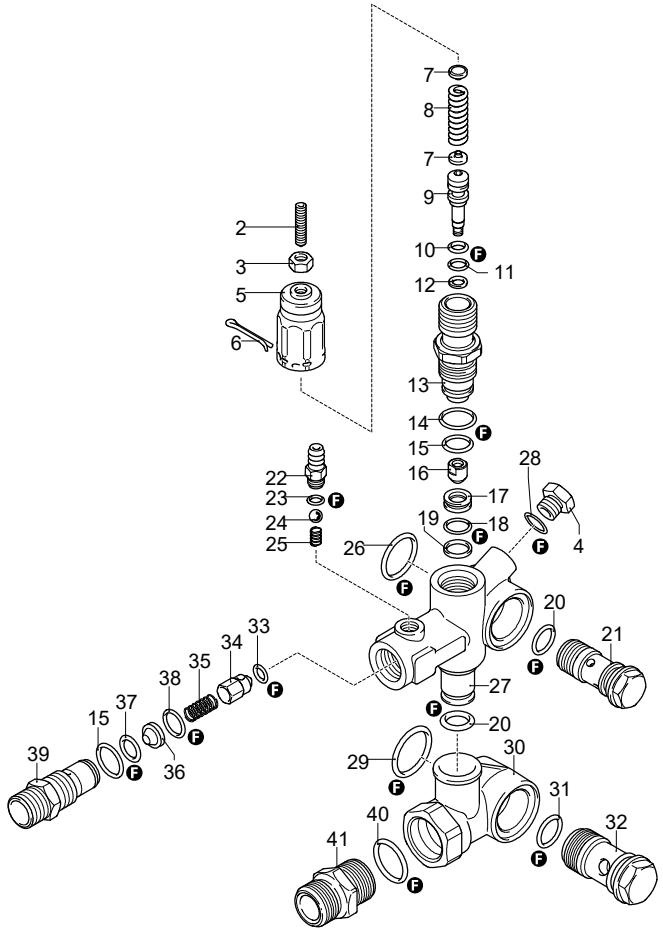

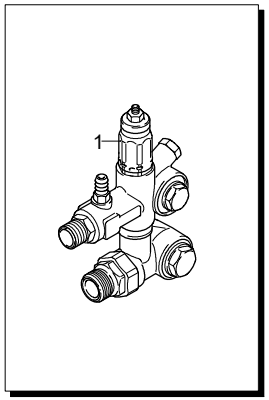

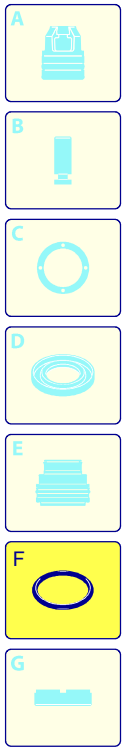

Validity	Pos.	Code	Description	Q
	1	25728	Complete valve	1
	2	2840970	Screw	1
	3	1060120	Nut	1
	4	3740100	Plug	1
	5	2500540	Insert	1
	6	2500550	Split pin	1
	7	1980220	Wobble plate	2
	8	2760410	Spring	1
	9	2760400	Piston	1
	10	2260100	O-ring	1
	11	660190	O-ring	1
	12	2760210	Ring	1
	13	2760570	Guide	1
	14	1200690	O-ring	1
	15	394280	O-ring	5
	16	2260070	Shutter	1
	17	2760980	Seat	1
	18	770140	O-ring	1
	19	2760640	Ring	1
	20	390080	O-ring	2
	21	1540272	Screw	1
	22	1982520	Hose tail	1
	23	480480	O-ring	1
	24	1250280	Ball	1
	25	1560520	Spring	1
	26	2260190	O-ring	1
	27	3740010	Valve body	1
	28	600180	O-ring	1
	29	1540630	O-ring	1
	30	3740020	Body	1
	31	880270	O-ring	1
	32	2260420	Screw	1
	33	2101770	O-ring	1
	34	2760131	Shutter	1
	35	2760200	Spring	1
	36	2760240	Injector	1
	37	1470210	O-ring	1
	38	2760270	O-ring	1
	39	2760230	Fitting	1
	40	480440	O-ring	1
	41	3600760	Fitting	1
	F	42780	Gasket kit	1

UN_CE_1612-MR

Model 5850

Version:

Serial number:

Code: **25672**

26/04/2018

230 V - 50 Hz | **schuko**

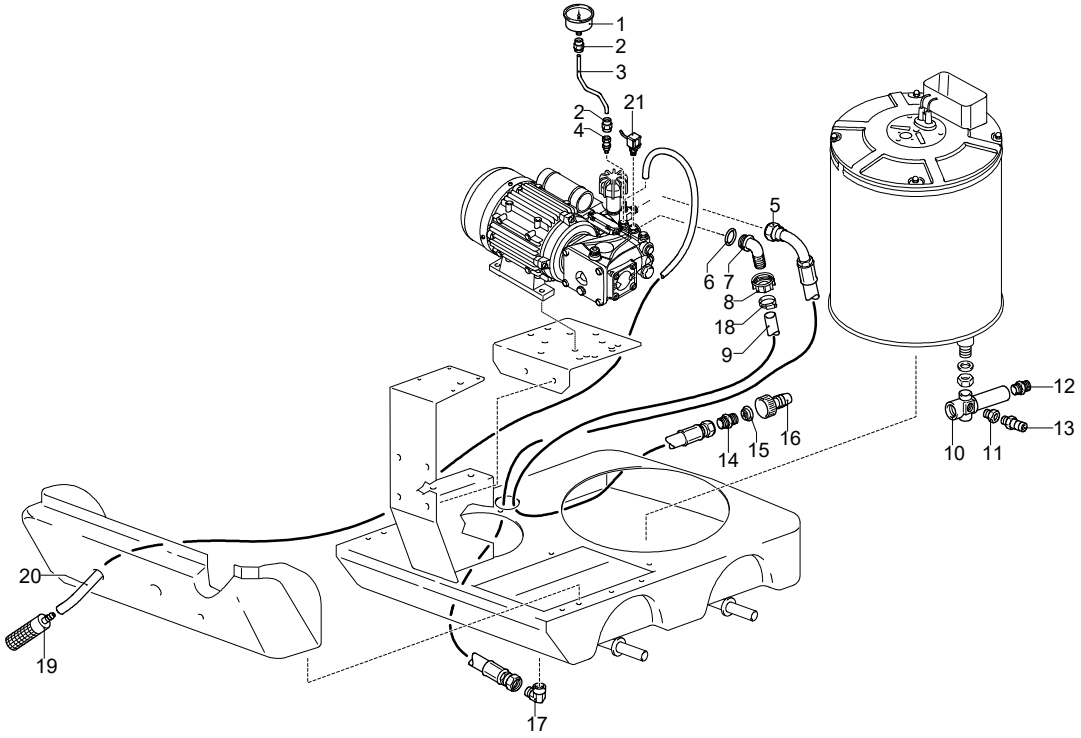

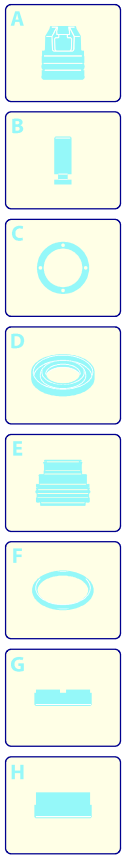

Validity	Pos.	Code	Description	Q
	1	3163130	Pressure gauge	1
	2	3161250	Fitting	2
	3	3163090	Pipe	1
	4	3164390	Fitting	1
	5	3161320	Pipe	1
	6	3161030	Gasket	1
	7	3161120	Fitting	1
	8	3160490	Ring nut	1
	9	3161280	Pipe	1
	10	3161160	Fitting	1
	11	3161240	Fitting	1
	12	3161150	Fitting	1
	13	3161400	Safety valve	1
	14	3160480	Fitting	1
	15	50713	Filter	1
	16	3163100	Fitting	1
	17	3160530	Fitting	1
	18	1140690	Clamp	1
	19	1341030	Filter	1
	20	3780380	Detergent hose	1
	21	3164440	Pressure switch	1

UN_CE_1609-MR

Model 5850

Version:

Serial number:

Code: **25672**

26/04/2018

230 V - 50 Hz | **schuko**

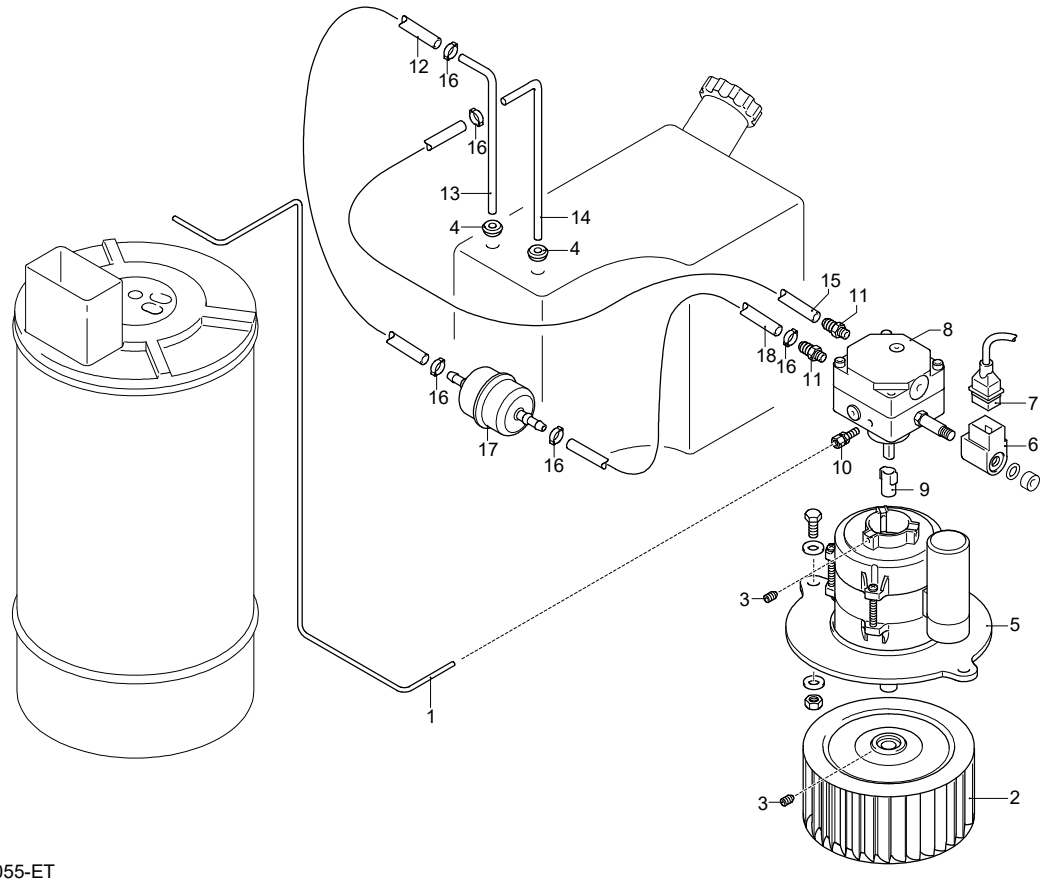

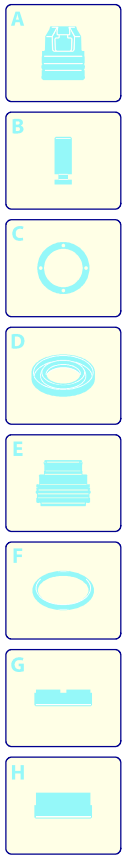

Validity	Pos.	Code	Description	Q
	1	3163190	Pipe	1
	2	3161820	Fan	1
	3	3163540	Screw	1
	4	3161050	Gland	2
	5	3163490	Motor	1
	6	3160320	Solenoid	1
	7	3161440	Cable	1
	8	3163040	Pump	1
	9	3160300	Coupling	1
	10	3160330	Fitting	1
	11	3160340	Hose tail	2
	12	3161590	Pipe	1
	13	3163780	Pipe	1
	14	3161660	Pipe	1
	15	3161580	Pipe	1
	16	3162060	Clamp	5
	17	3163050	Filter	1
	18	3161600	Pipe	1

UN_CE_1055-ET

Model 5850

Version:

Serial number:

Code: **25672**

26/04/2018

230 V - 50 Hz | **schuko**

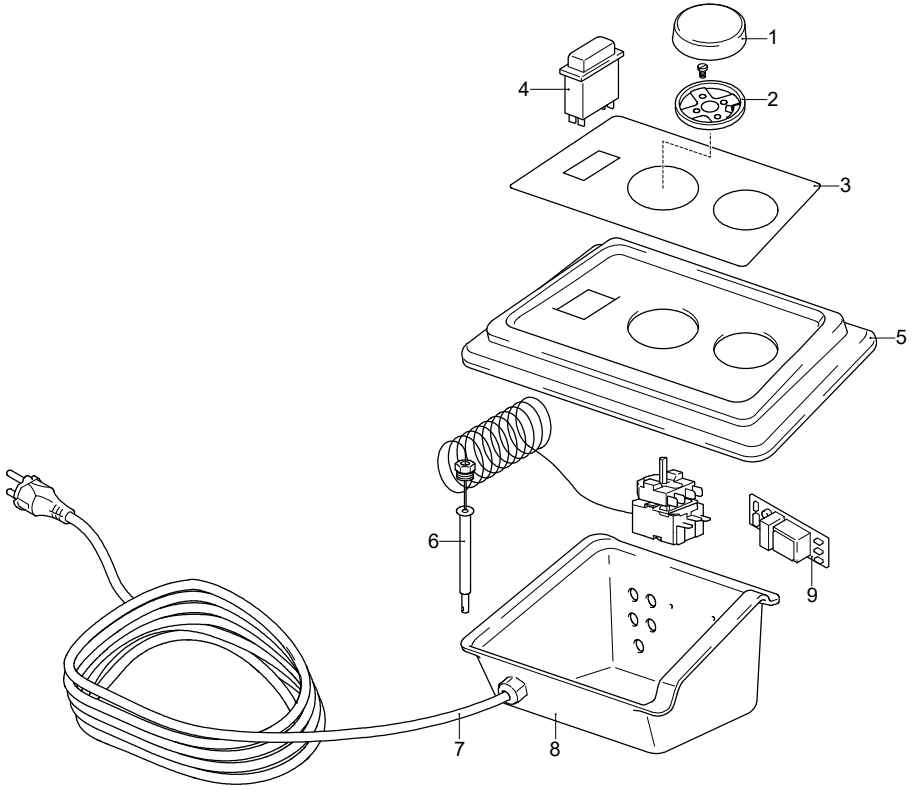

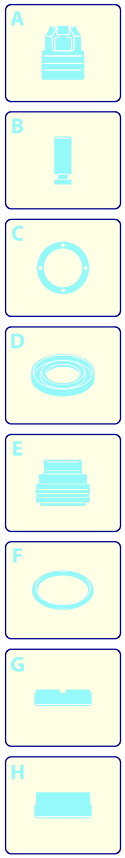

Validity	Pos.	Code	Description	Q
	1	3161960	Knob	1
	2	3161990	Support	1
	3	3163120	Plate	1
	4	50721	Switch	1
	5	3163010	Support	1
	6	50720	Thermostat	1
	7	1760450	Cable	1
	8	3163000	Box	1
	9	3162790	Board	1

UN_CE_1591-MR

Model 5850

Version:

Serial number:

Code: **25672**

26/04/2018

230 V - 50 Hz | **schuko**

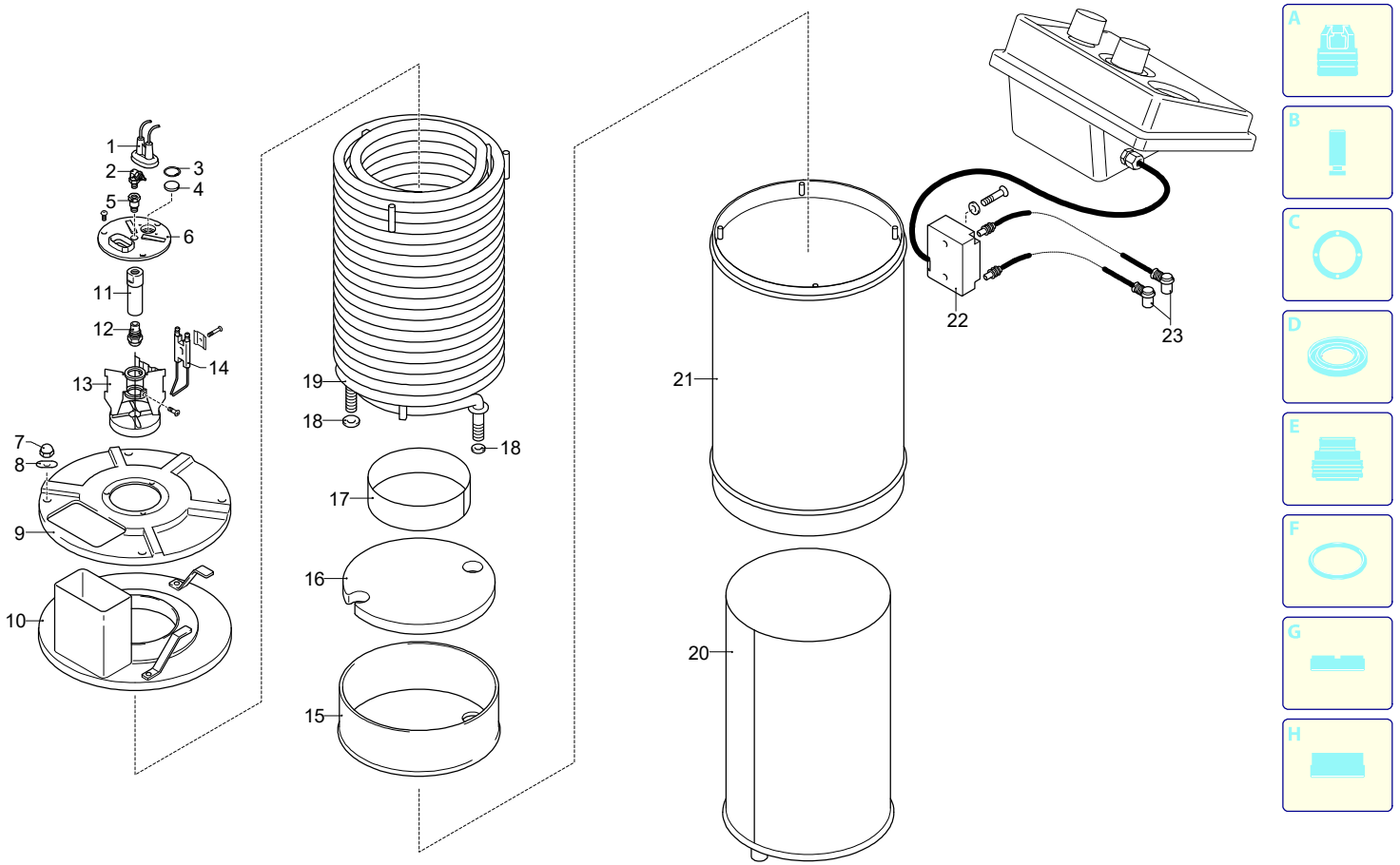

Validity	Pos.	Code	Description	Q
	1	3162370	Guard	1
	2	3161100	Fitting	1
	3	3162030	Ring	1
	4	3161860	Glass	1
	5	3161230	Fitting	1
	6	3161840	Plate	1
	7	3163960	Nut	4
	8	3163940	Washer	4
	9	3161790	Cover	1
	10	3161780	Cover	1
	11	3161870	Nozzle holder	1
	12	3161710	Nozzle	1
	13	3161560	Support	1
	14	3161890	Electrode	1
	15	3161770	Cover	1
	16	3161830	Plate	1
	17	3161430	Ring	1
	18	3162040	Washer	2
	19	3161750	Pipe coil	1
	20	3161450	Boiler	1
	21	3163180	Body	1
	22	50717	Danfoss/Fida transformer	1
	23	3163210	Cable	1

UN_CE_1056-FP

Model 5850

Version:

Serial number:

Code: **25672**

26/04/2018

230 V - 50 Hz | **schuko**

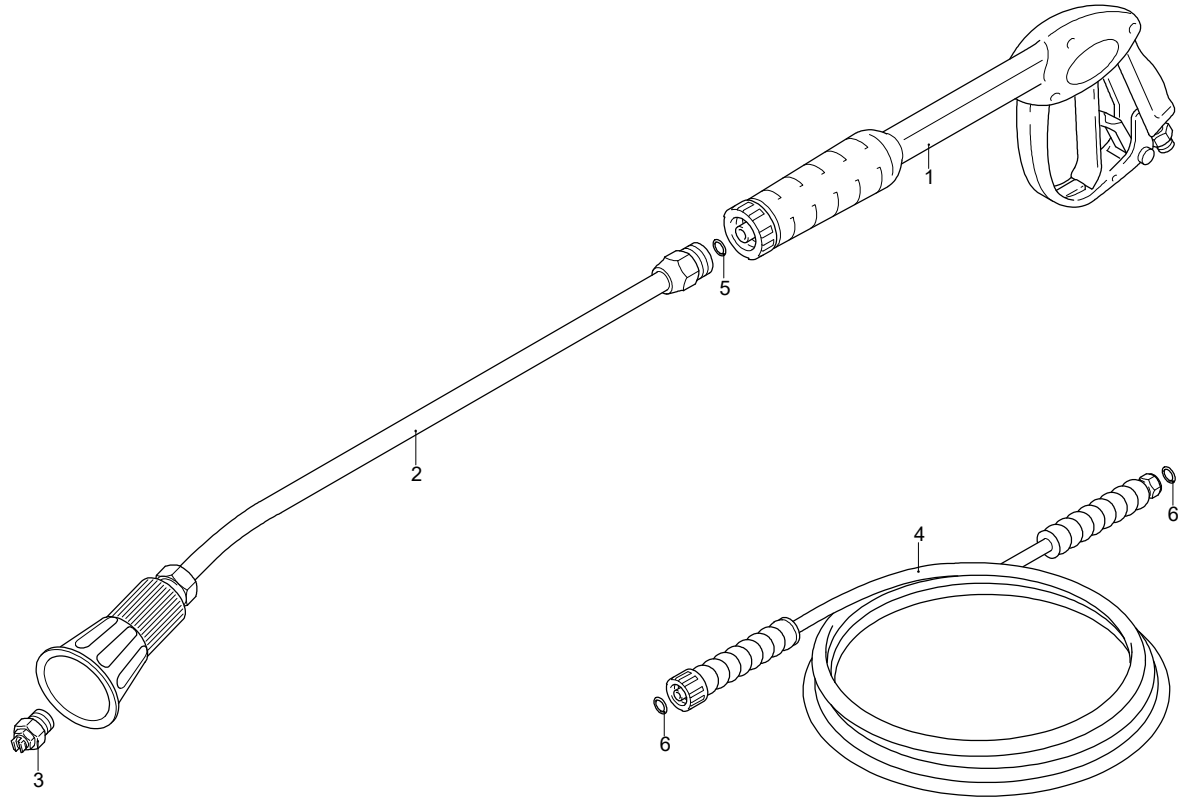

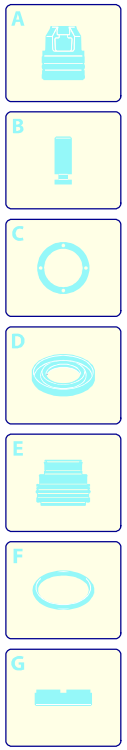

Validity	Pos.	Code	Description	Q
	1	41047	Gun	1
	2	40826	Lance	1
	3	3082	Nozzle	1
	4	50689	High pressure hose	1
	5	391000	O-ring	1
	6	2000570	O-ring	2

UN_CE_1651-EP