Model 5670

Version:

Serial number:

Code: **25671**

26/04/2018

230 V - 50 Hz | **schuko**

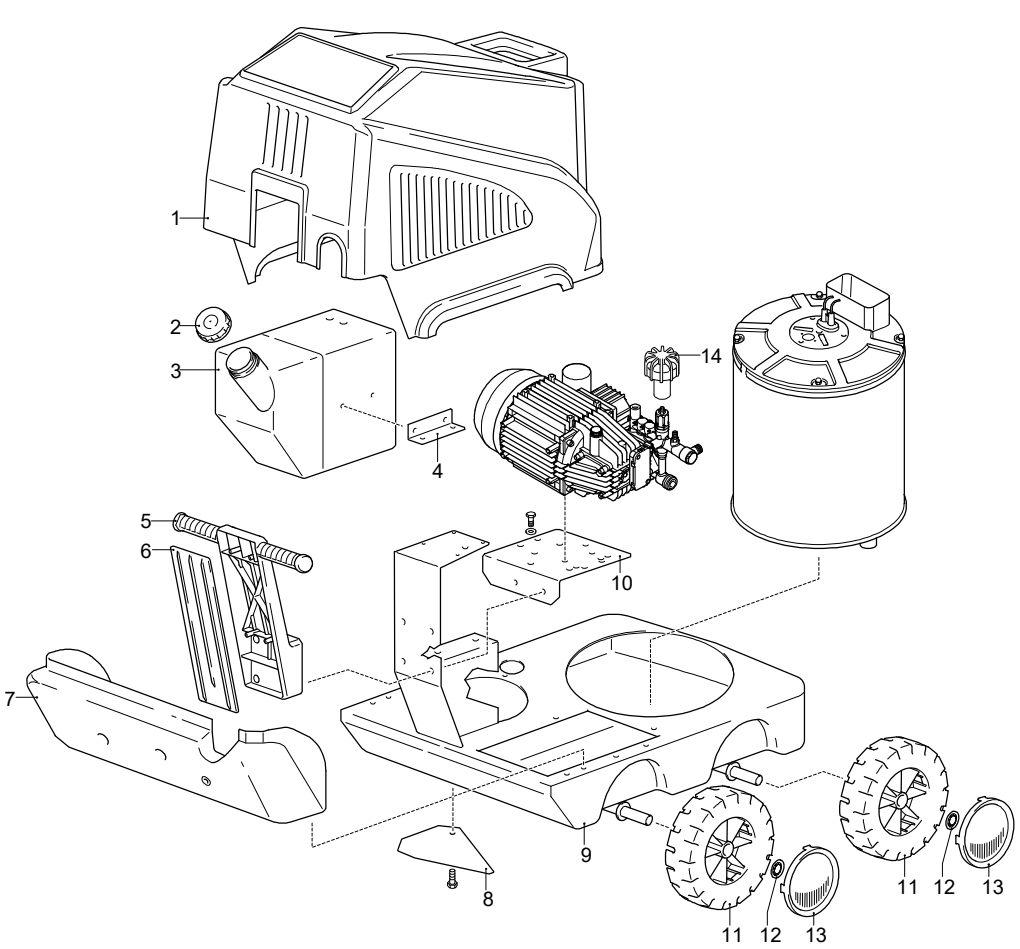

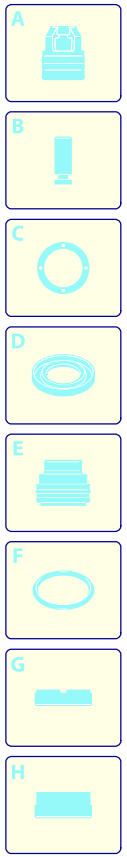

Validity	Pos.	Code	Description	Q
	1	3164540	Casing	1
	2	50933	Plug	1
	3	3163030	Tank	1
	4	3163110	Plate	1
	5	3163140	Handle	1
	6	3163150	Cover	1
	7	3163160	Cover	1
	8	3161910	Plate	1
	9	3162980	Frame	1
	10	3163080	Support	1
	11	3160770	Wheel	2
	12	3162010	Ring	2
	13	3164530	Guard	2
	14	2360760	Knob	1

UN_CE_1603-DQ

Model 5670

Version:

Serial number:

Code: **25671**

26/04/2018

230 V - 50 Hz | **schuko**

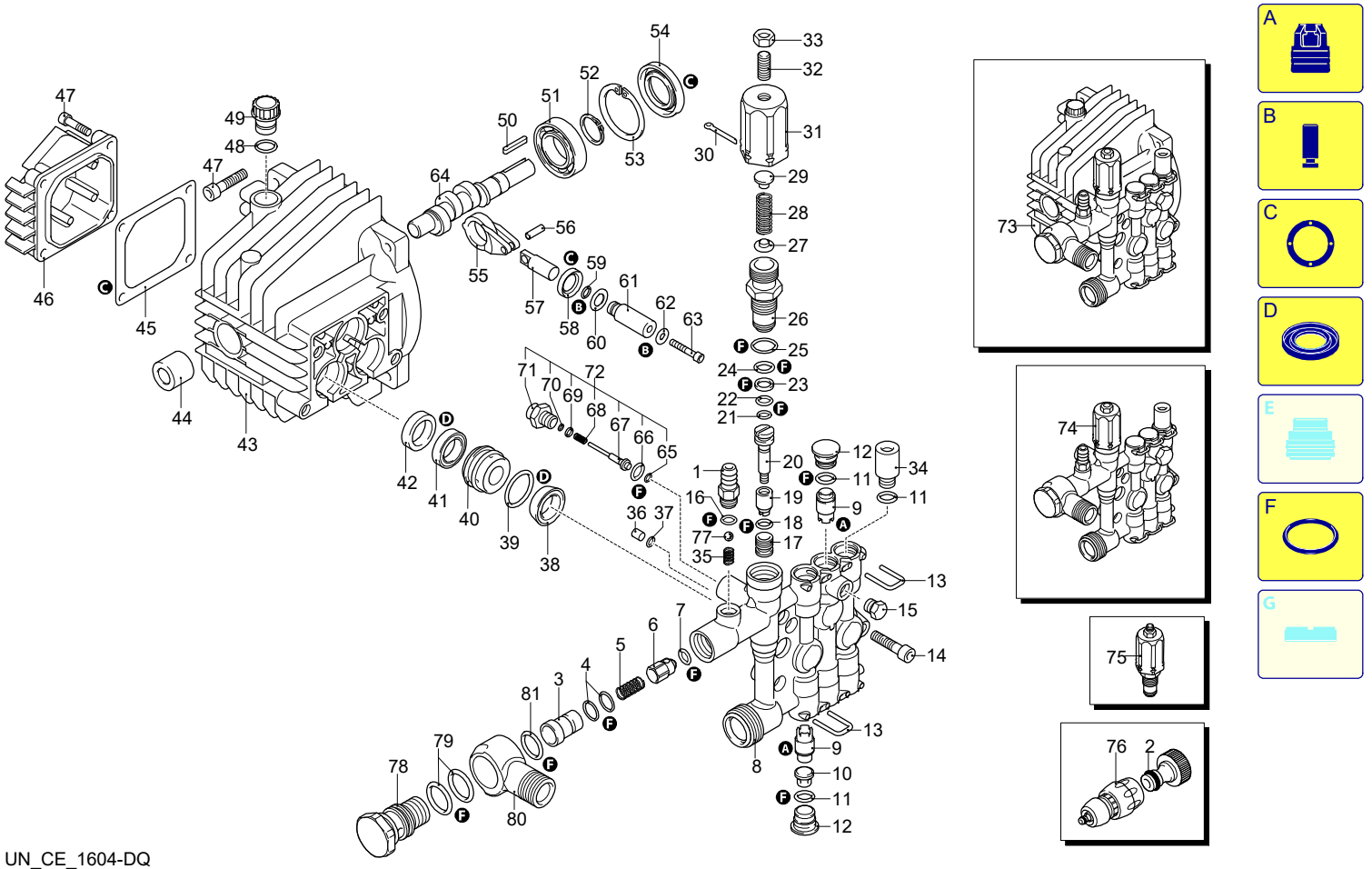

UN_CE_1604-DQ

Validity	Pos.	Code	Description	Q
	1	1982520	Hose tail	1
	2	3520370	Fitting	1
	3	2901060	Injector	1
	4	800560	O-ring	2
	5	1080091	Spring	1
	6	2901070	Shutter	1
	7	1460430	O-ring	1
	8	1344850	Head	1
	9	1349055	Valve	6
	10	1344770	Spacer	3
	11	1465720	O-ring	6
	12	1344800	Plug	5
	13	1344790	Fork	6
	14	850850	Screw	4
	15	620301	Plug	1
	16	480480	O-ring	1
	17	1342701	Seat	1
	18	600180	O-ring	1
	19	1460151	Piston	1
	20	2021900	Piston	1
	21	1080190	O-ring	1
	22	600180	O-ring	1
	23	1080401	Ring	1
	24	820510	O-ring	1
	25	740290	O-ring	1
	26	1344870	Piston guide	1
	27	1343450	Wobble plate	1
	28	1460190	Spring	1
	29	1980220	Wobble plate	1
	30	2500550	Split pin	1
	31	1344881	Insert	1
	32	1980740	Plug	1
	33	1060120	Nut	1
	34	1345020	Plug	1
	35	1560520	Spring	1
	36	1344890	Plug	1
	37	2560870	O-ring	1
	38	2460180	O-ring	3
	39	770260	O-ring	3
	40	1344750	Piston guide	3
	41	1260440	Water seal	3
	42	1344760	Ring	3
	43	1344050	Pump body	1
	44	1260050	Bushing	1
	45	1040710	O-ring	1
	46	1344060	Cover	1
	47	1260780	Screw	1
	48	880840	O-ring	1
	49	1343900	Plug	1
	50	880111	Key	1
	51	1341070	Bearing	1
	52	480890	Ring	1
	53	111120	Ring	1
	54	1341080	Ring	1
	55	1340060	Connecting-rod	3
	56	1340080	Pin	3
	57	1340070	Piston	3
	58	1260460	Oil seal	3
	59	600180	O-ring	3
	60	1341010	Plate	3
	61	1342740	Piston	3
	62	1341020	Washer	3

Model 5670

Version:

Serial number:

Code: **25671**

26/04/2018

230 V - 50 Hz | **schuko**

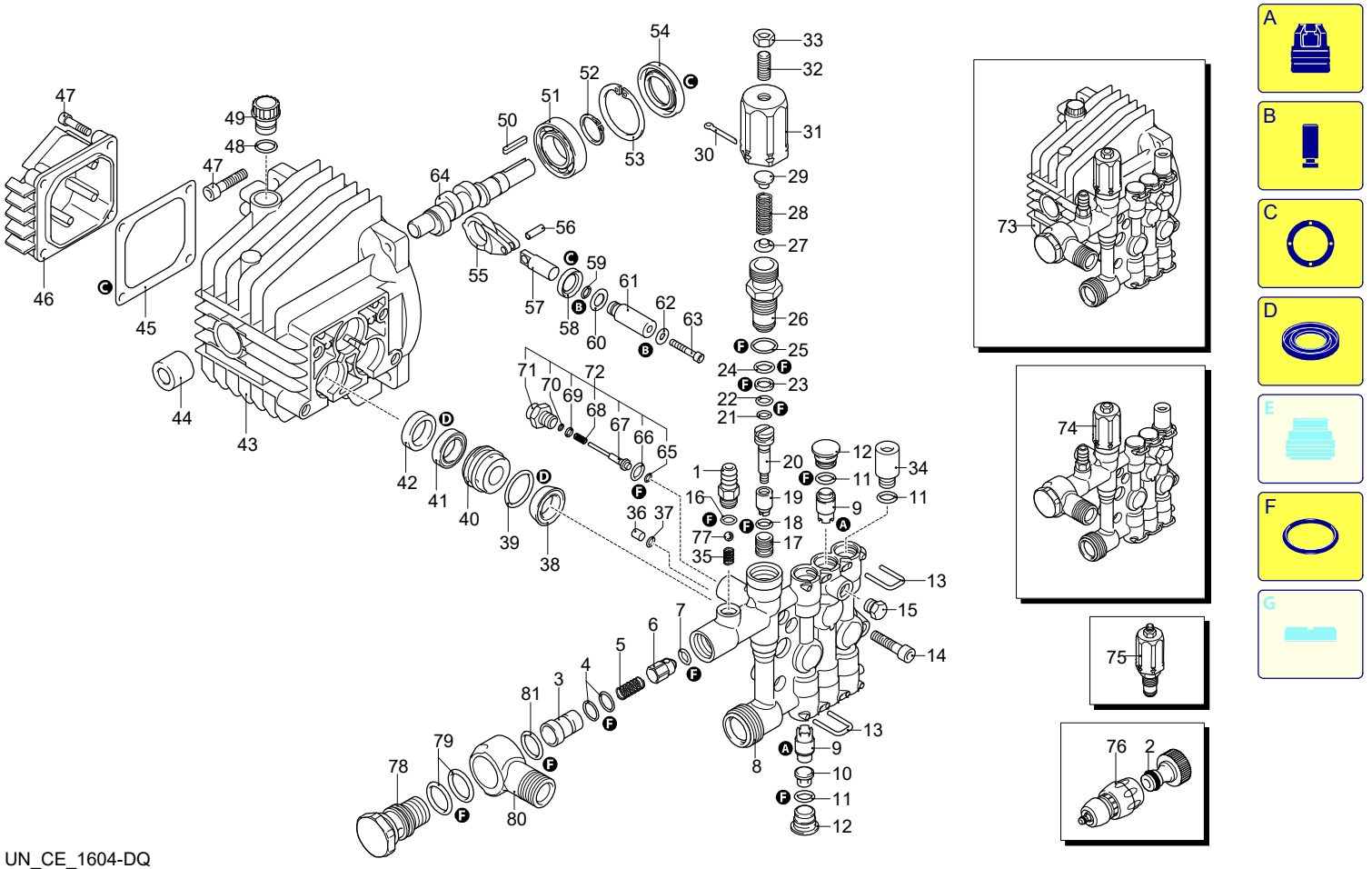

Validity	Pos.	Code	Description	Q
	63	850670	Screw	3
	64	1340170	Shaft	1
	65	1120680	O-ring	1
	66	600180	O-ring	1
	67	2022040	Pin	1
	68	2021630	Spring	1
	69	2021650	Washer	1
	70	1260820	O-ring	1
	71	1344830	Fitting	1
	72	42580	TSS Retrofit kit	1
	73	1349530	Pump assembly	1
	74	1349125	Head assembly	1
	75	42579	Valve kit adjustment	1
	76	3520360	Fitting	1
	77	1250280	Ball	1
	78	3960580	Plug	1
	79	3961100	O-ring	1
	80	1345380	Fitting	1
	81	2840890	O-ring	1
	A	42566	Valve kit	1
	B	2623	Piston kit	1
	C	1876	Oil seal kit	1
	D	42567	Water seal kit	1
	F	42568	Gasket kit	1

UN_CE_1604-DQ

Model 5670

Version:

Serial number:

Code: **25671**

26/04/2018

230 V - 50 Hz | **schuko**

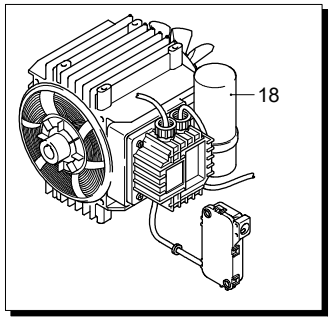

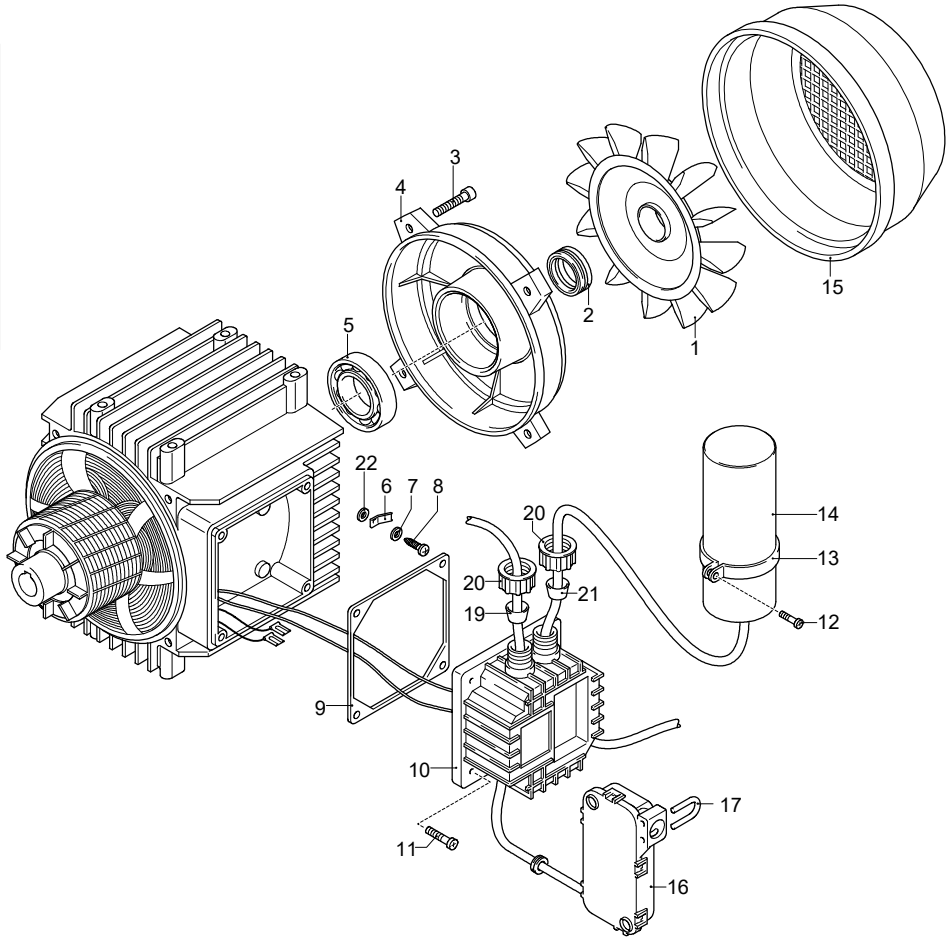

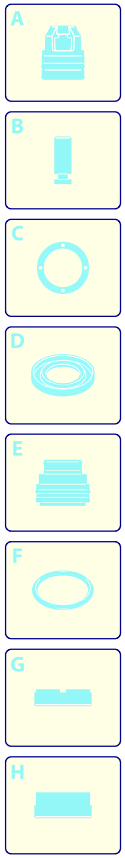

Validity	Pos.	Code	Description	Q
	1	1260300	Fan	1
	2	1340350	Seal	1
	3	1260760	Screw	1
	4	1340320	Shield	1
	5	1340340	Bearing	1
	6	3523500	Connector	1
	7	1260490	Washer	1
	8	2020570	Screw	1
	9	1340780	Gasket	1
	10	1341831	Box	1
	11	1261560	Screw	4
	12	1261560	Screw	1
	13	1340280	Clamp	1
	14	1263520	Capacitor	1
	15	1342040	Fan cowling	1
	16	2029752	TSS box assembly	1
	17	2022201	Fork	1
	18	44835	Motor	1
	19	1340660	Gland	1
	20	1340640	Ring nut	2
	21	1340650	Gland	1
	22	1262400	Washer	1

UN_CE_0976-ER

Model 5670

Version:

Serial number:

Code: **25671**

26/04/2018

230 V - 50 Hz | **schuko**

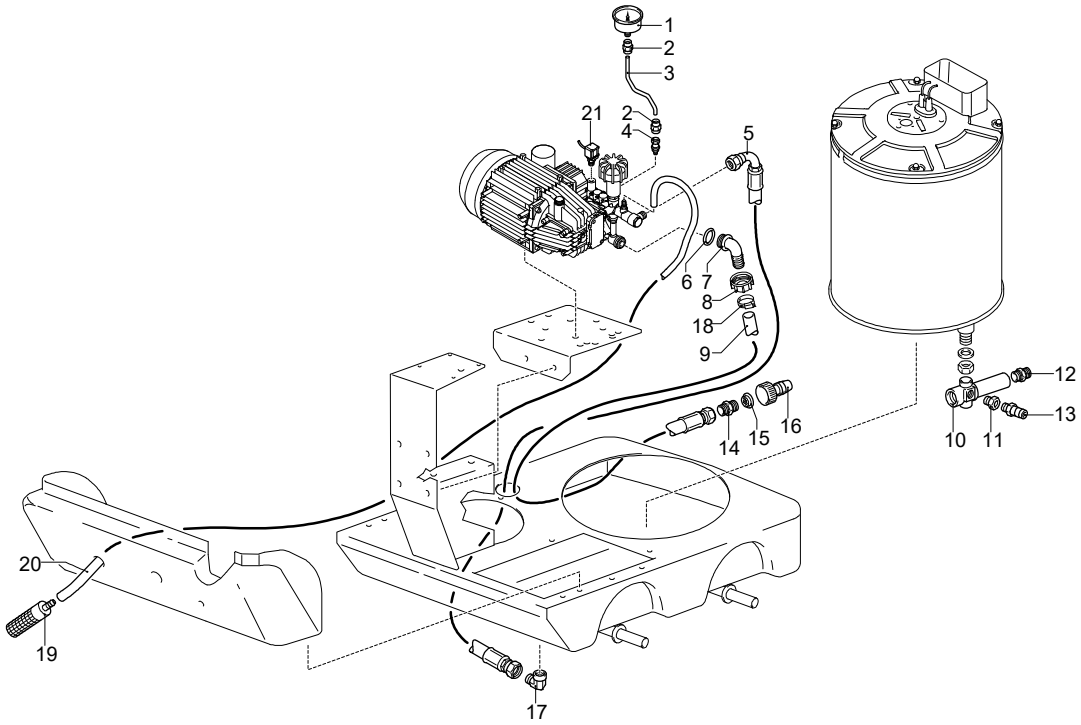

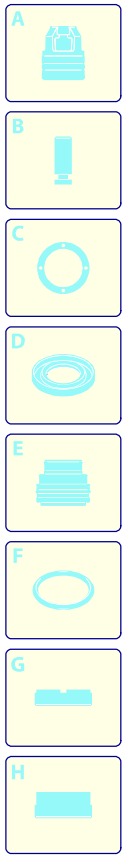

Validity	Pos.	Code	Description	Q
	1	3163130	Pressure gauge	1
	2	3161250	Fitting	2
	3	3163090	Pipe	1
	4	3164390	Fitting	1
	5	3161320	Pipe	1
	6	3161030	Gasket	1
	7	3161120	Fitting	1
	8	3160490	Ring nut	1
	9	3161280	Pipe	1
	10	3161160	Fitting	1
	11	3161240	Fitting	1
	12	3161150	Fitting	1
	13	3161400	Safety valve	1
	14	3160480	Fitting	1
	15	50713	Filter	1
	16	3163100	Fitting	1
	17	3160530	Fitting	1
	18	1140690	Clamp	1
	19	1341030	Filter	1
	20	3780380	Detergent hose	1
	21	3164440	Pressure switch	1

UN_CE_1605-DQ

Model 5670

Version:

Serial number:

Code: **25671**

26/04/2018

230 V - 50 Hz | **schuko**

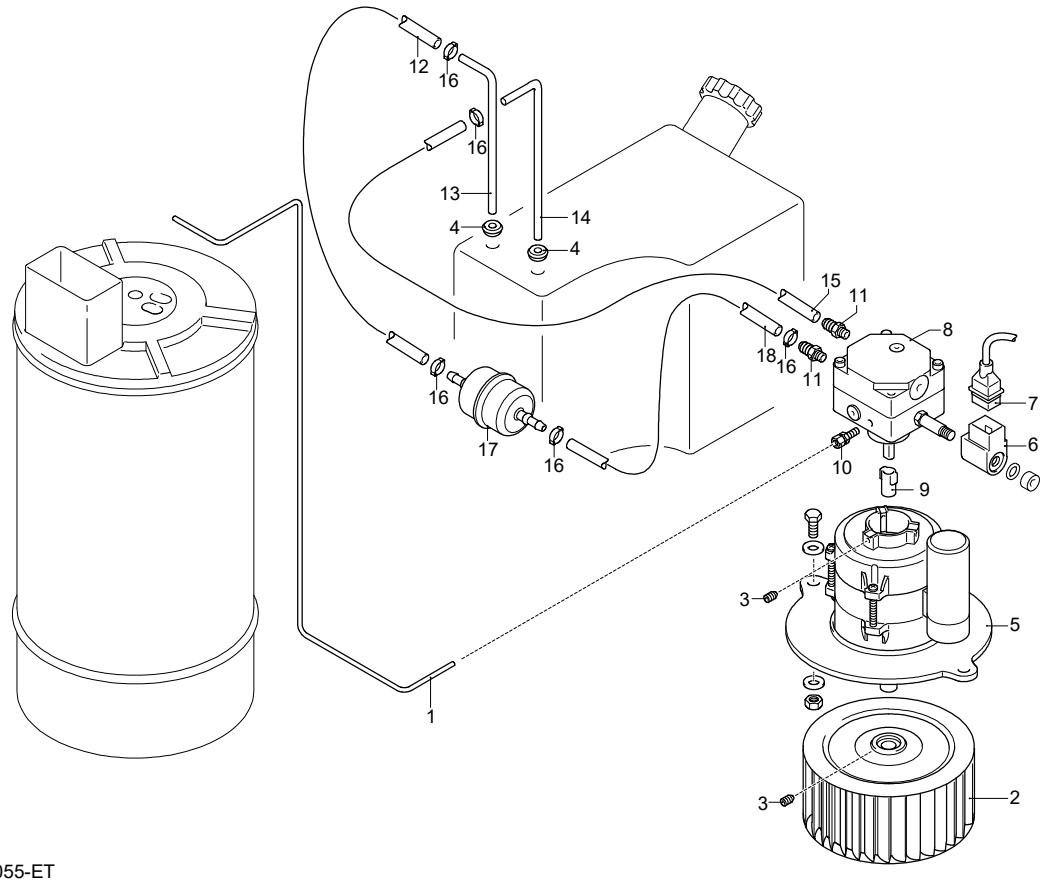

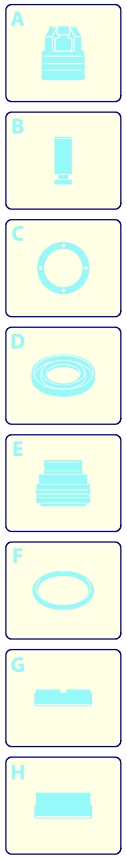

Validity	Pos.	Code	Description	Q
	1	3163190	Pipe	1
	2	3161820	Fan	1
	3	3163540	Screw	1
	4	3161050	Gland	2
	5	3163490	Motor	1
	6	3160320	Solenoid	1
	7	3161440	Cable	1
	8	3163040	Pump	1
	9	3160300	Coupling	1
	10	3160330	Fitting	1
	11	3160340	Hose tail	2
	12	3161590	Pipe	1
	13	3163780	Pipe	1
	14	3161660	Pipe	1
	15	3161580	Pipe	1
	16	3162060	Clamp	5
	17	3163050	Filter	1
	18	3161600	Pipe	1

UN_CE_1055-ET

Model 5670

Version:

Serial number:

Code: **25671**

26/04/2018

230 V - 50 Hz | **schuko**

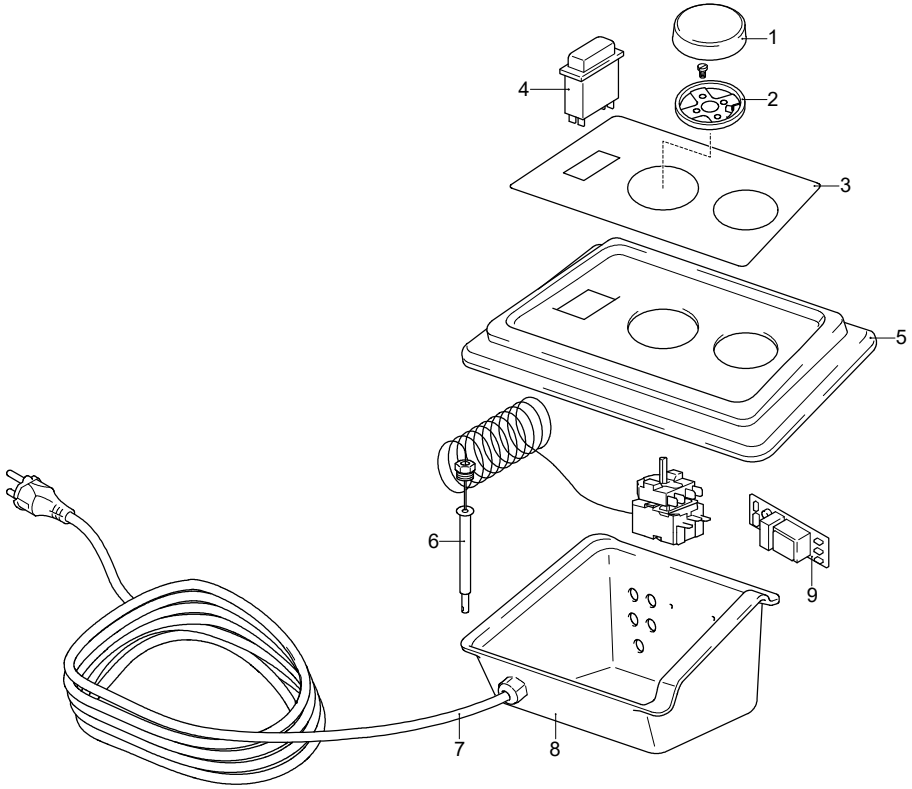

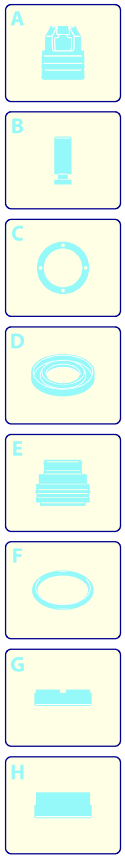

Validity	Pos.	Code	Description	Q
	1	3161960	Knob	1
	2	3161990	Support	1
	3	3163120	Plate	1
	4	50721	Switch	1
	5	3163010	Support	1
	6	50720	Thermostat	1
	7	1760450	Cable	1
	8	3163000	Box	1
	9	3162790	Board	1

UN_CE_1591-MR

Model 5670

Version:

Serial number:

Code: **25671**

26/04/2018

230 V - 50 Hz | **schuko**

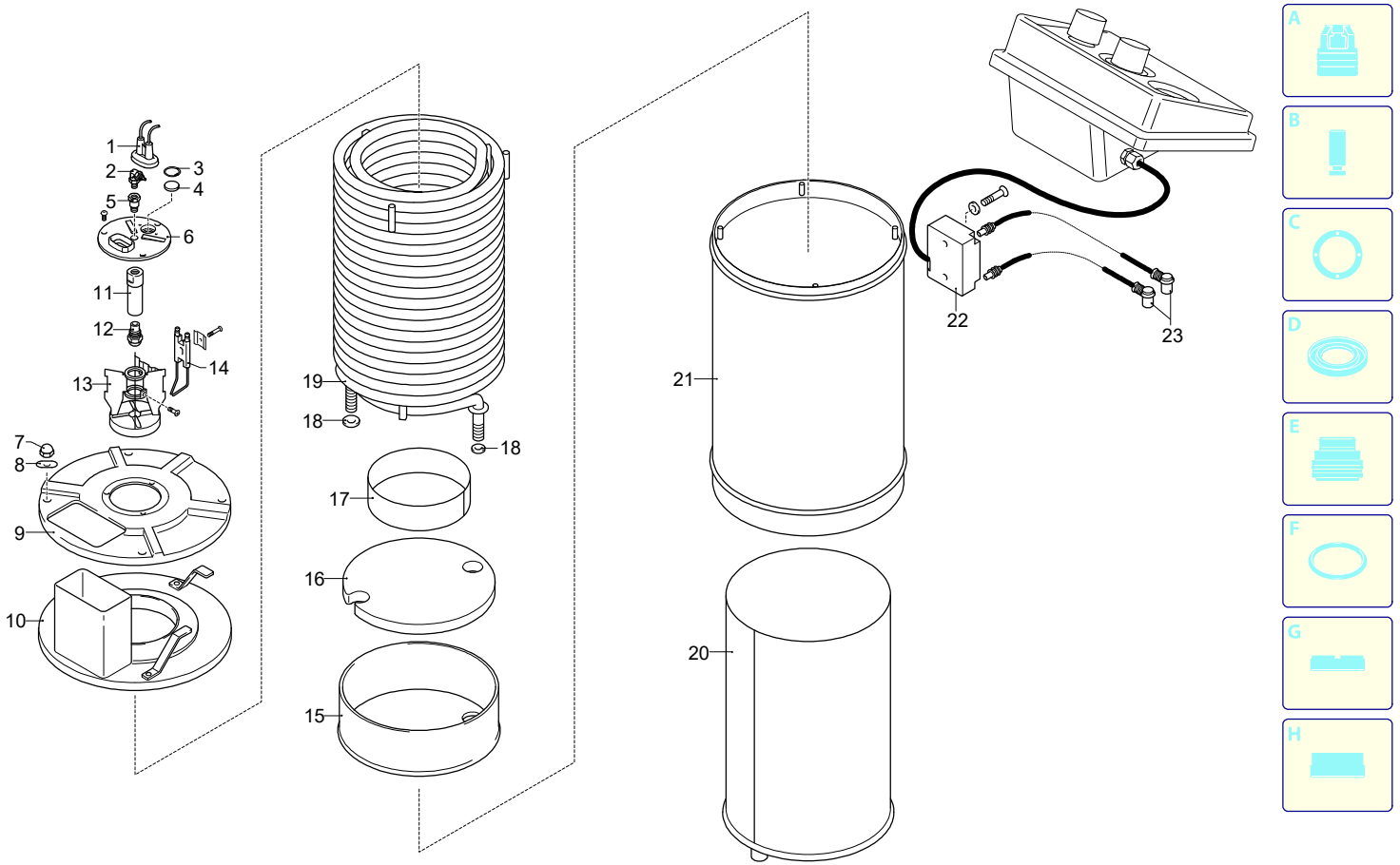

Validity	Pos.	Code	Description	Q
	1	3162370	Guard	1
	2	3161100	Fitting	1
	3	3162030	Ring	1
	4	3161860	Glass	1
	5	3161230	Fitting	1
	6	3161840	Plate	1
	7	3163960	Nut	4
	8	3163940	Washer	4
	9	3161790	Cover	1
	10	3161780	Cover	1
	11	3161870	Nozzle holder	1
	12	3161710	Nozzle	1
	13	3161560	Support	1
	14	3161890	Electrode	1
	15	3161770	Cover	1
	16	3161830	Plate	1
	17	3161430	Ring	1
	18	3162040	Washer	2
	19	3161750	Pipe coil	1
	20	3161450	Boiler	1
	21	3163180	Body	1
	22	50717	Danfoss/Fida transformer	1
	23	3163210	Cable	1

UN_CE_1056-FP

Model 5670

Version:

Serial number:

Code: **25671**

26/04/2018

230 V - 50 Hz | **schuko**

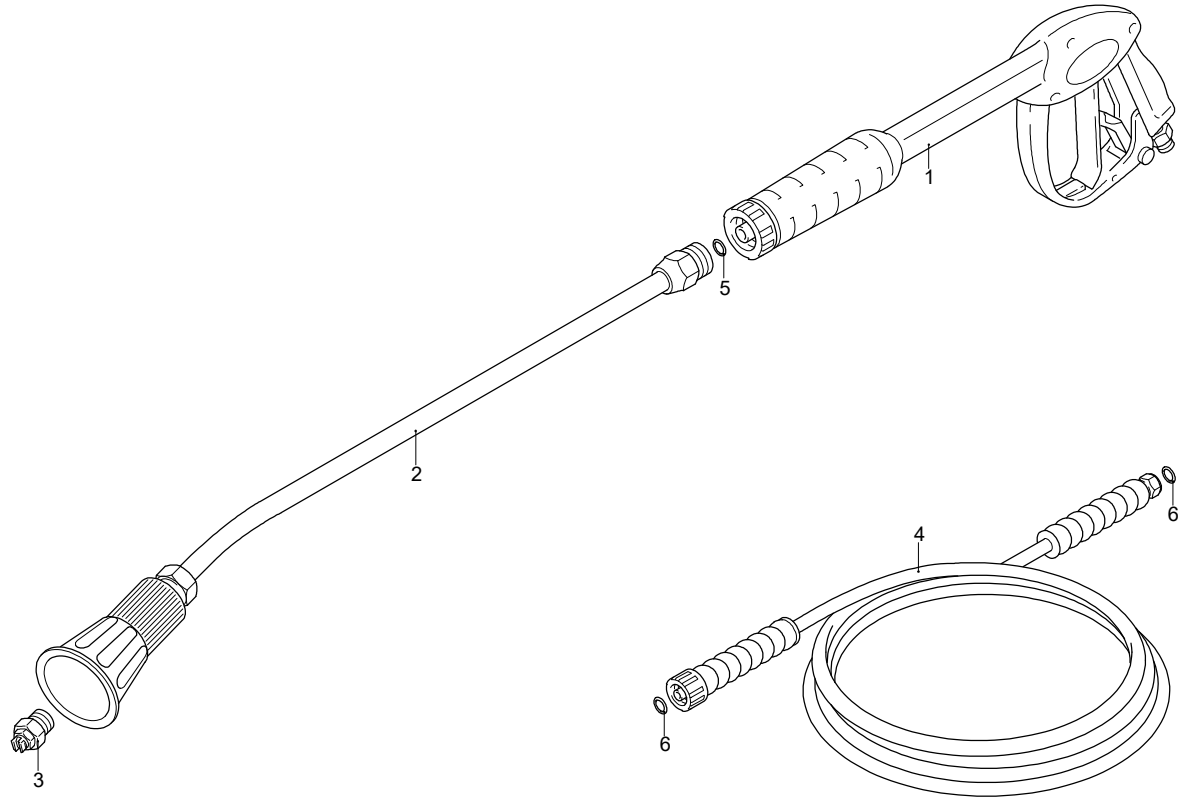

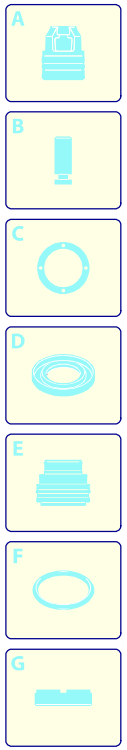

Validity	Pos.	Code	Description	Q
	1	41047	Gun	1
	2	40826	Lance	1
	3	3104	Nozzle	1
	4	50689	High pressure hose	1
	5	391000	O-ring	1
	6	2000570	O-ring	1

UN_CE_1651-EP