Model 5640

Version:

Serial number:

Code: **25670**

26/04/2018

230 V - 50 Hz | **schuko**

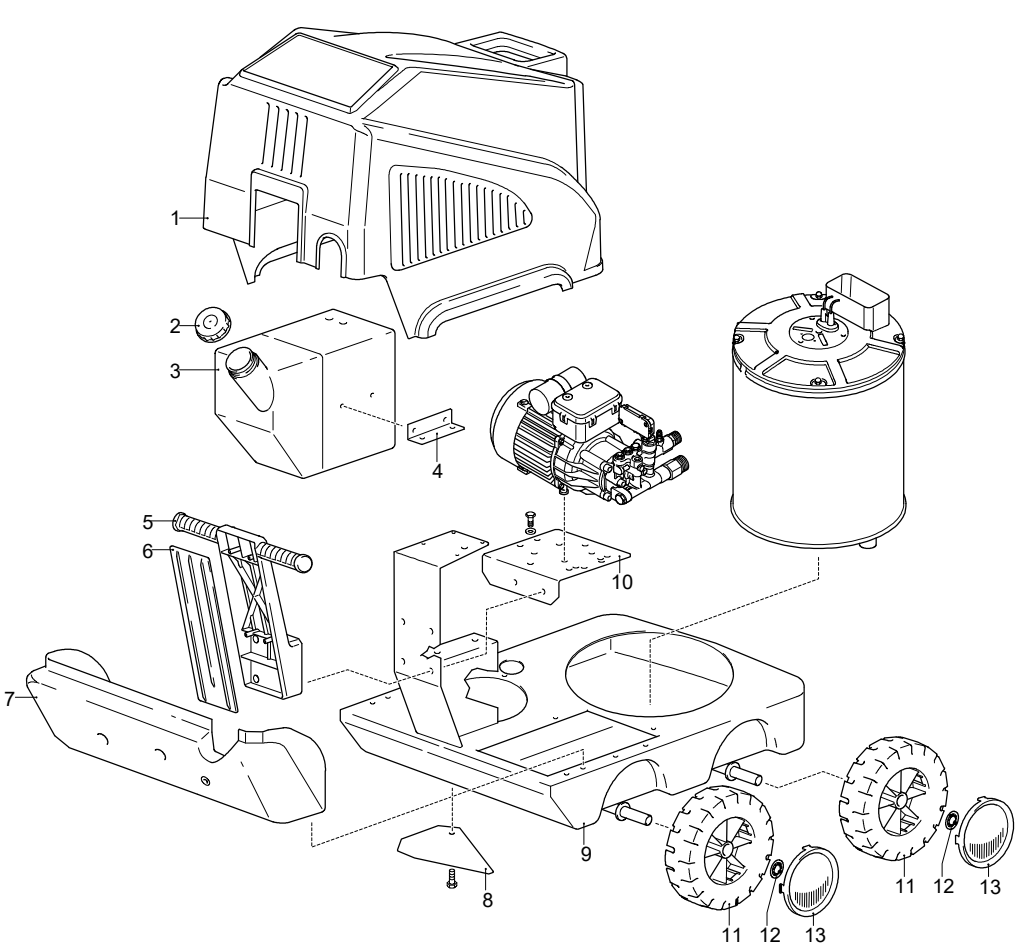

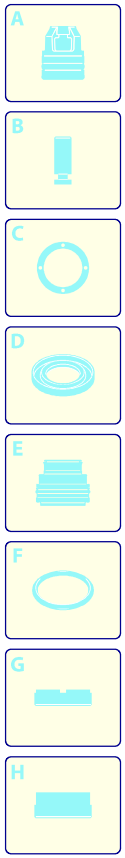

Validity	Pos.	Code	Description	Q
	1	3164540	Casing	1
	2	50933	Plug	1
	3	3163030	Tank	1
	4	3163110	Plate	1
	5	3163140	Handle	1
	6	3163150	Cover	1
	7	3163160	Cover	1
	8	3161910	Plate	1
	9	3162980	Frame	1
	10	3163080	Support	1
	11	3160770	Wheel	2
	12	3162010	Ring	2
	13	3164530	Guard	2

UN_CE_1602-MR

Model 5640

Version:

Serial number:

Code: **25670**

26/04/2018

230 V - 50 Hz | **schuko**

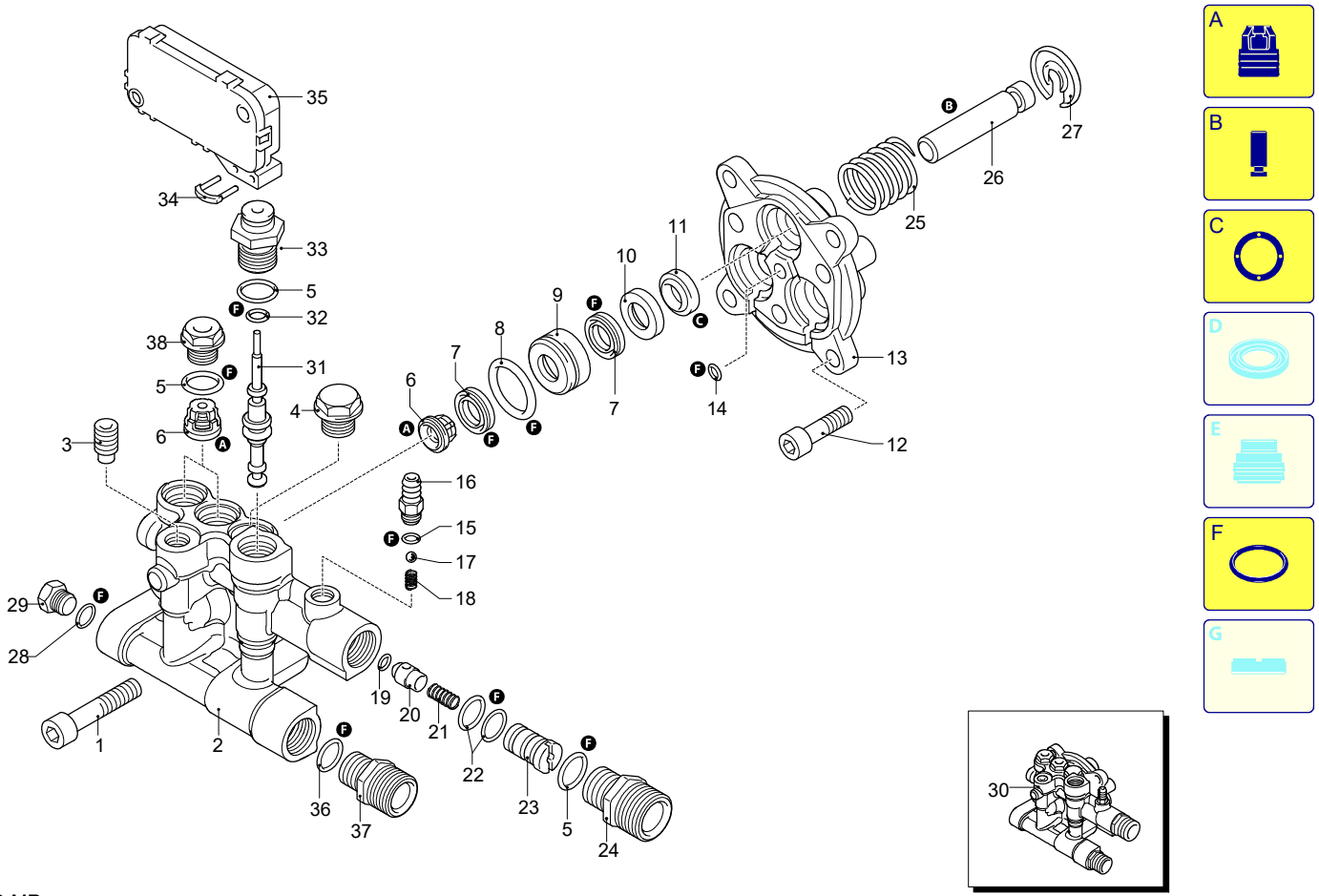

A

B

C

D

E

F

G

UN_CE_1590-MR

Validity	Pos.	Code	Description	Q
	1	800220	Screw	3
	2	2900430	Head	1
	3	2840470	Screw	1
	4	2840130	Plug	1
	5	740290	O-ring	6
	6	2849051	Complete valve	6
	7	2200141	Water seal	6
	8	770590	O-ring	3
	9	2840550	Bushing	3
	10	2840540	Bushing	3
	11	1683500	Oil seal	3
	12	2900500	Screw	1
	13	2900020	Piston guide	1
	14	480480	O-ring	1
	15	480480	O-ring	1
	16	1982520	Hose tail	1
	17	1250280	Ball	1
	18	1560520	Spring	1
	19	1460430	O-ring	1
	20	2901070	Shutter	1
	21	1080091	Spring	1
	22	800560	O-ring	2
	23	2901110	Injector	1
	24	2900950	Fitting	1
	25	2901170	Spring	3
	26	2840530	Piston	3
	27	2840050	Lock	3
	28	820510	O-ring	1
	29	880581	Plug	1
	30	2909155	Head assembly	1
	31	2909005	Spring assembly	1
	32	1120680	O-ring	1
	33	2900130	Fitting	1
	34	2022201	Fork	1
	35	2029753	TSS box assembly	1
	36	740290	O-ring	1
	37	2900850	Fitting	1
	38	2900350	Plug	2
	A	2233	Valve kit	1
	B	2313	Piston kit	1
	C	42124	Oil seal kit	1
	F	42438	Gasket kit	1

Model 5640

Version:

Serial number:

Code: **25670**

26/04/2018

230 V - 50 Hz | **schuko**

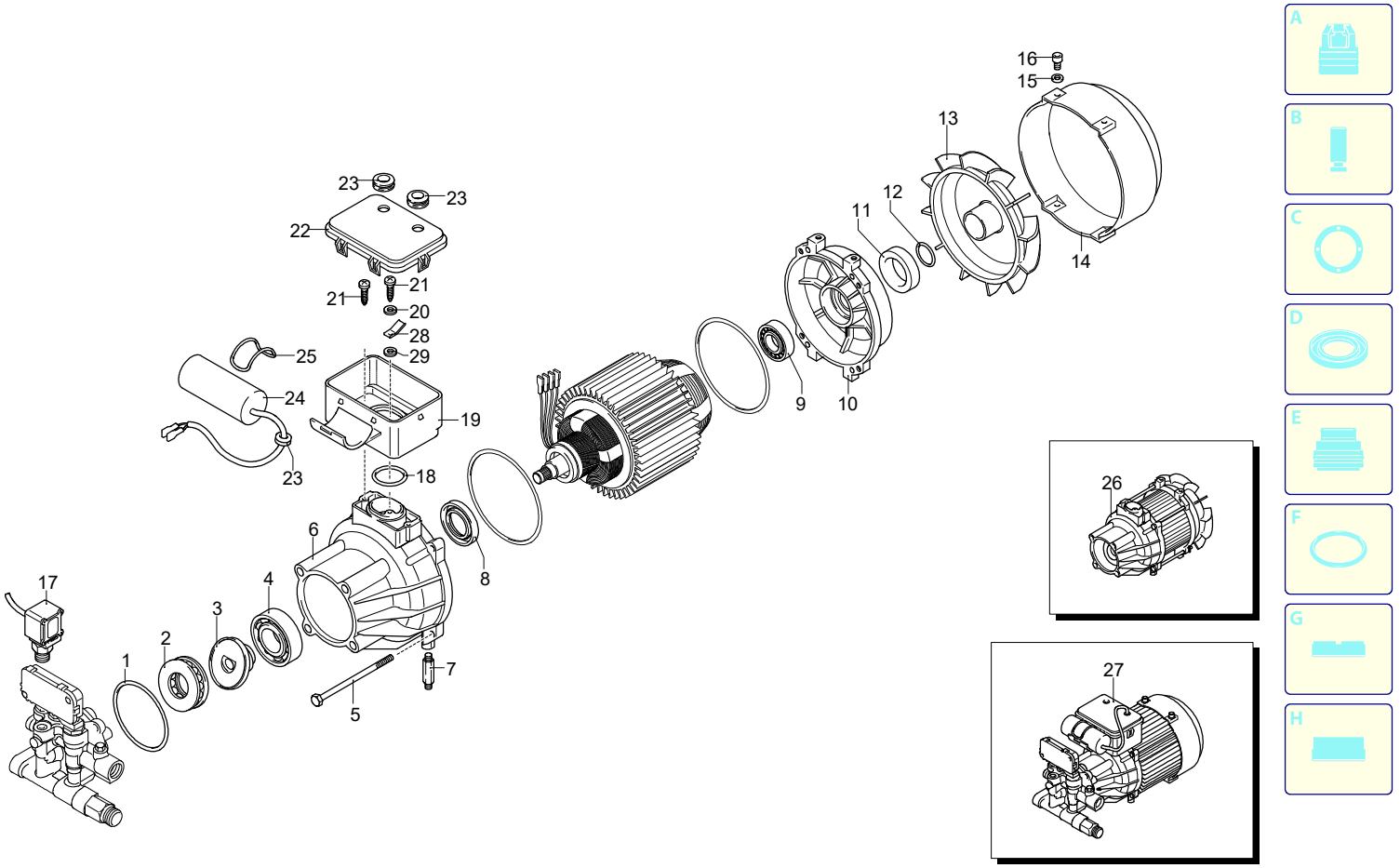

UN_CE_1589-MR

Validity	Pos.	Code	Description	Q
	1	3040270	O-ring	1
	2	2900170	Bearing	1
	3	2900520	Wobble plate	1
	4	1780490	Bearing	1
	5	2320090	Screw	4
	6	2900010	Pump body	4
	7	1462400	Stud bolt	1
	8	1460530	Oil seal	1
	9	1460590	Bearing	1
	10	1460040	Shield	1
	11	1461200	Oil seal	1
	12	394280	O-ring	1
	13	1460370	Fan	1
	14	4240520	Conveyor	1
	15	1680960	Washer	2
	16	1460460	Screw	2
	17	3164440	Pressure switch	1
	18	660170	O-ring	1
	19	2320131	Box	1
	20	1260490	Washer	1
	21	2020570	Screw	3
	22	2320271	Cover	1
	23	1462900	Gland	3
	24	1982590	Capacitor	1
	25	2320640	O-ring	1
	26	44834	Motor	1
	27	25726	Electric pump assembly	1
	28	3523500	Connector	1
	29	1262400	Washer	1

Model 5640

Version:

Serial number:

Code: **25670**

26/04/2018

230 V - 50 Hz | **schuko**

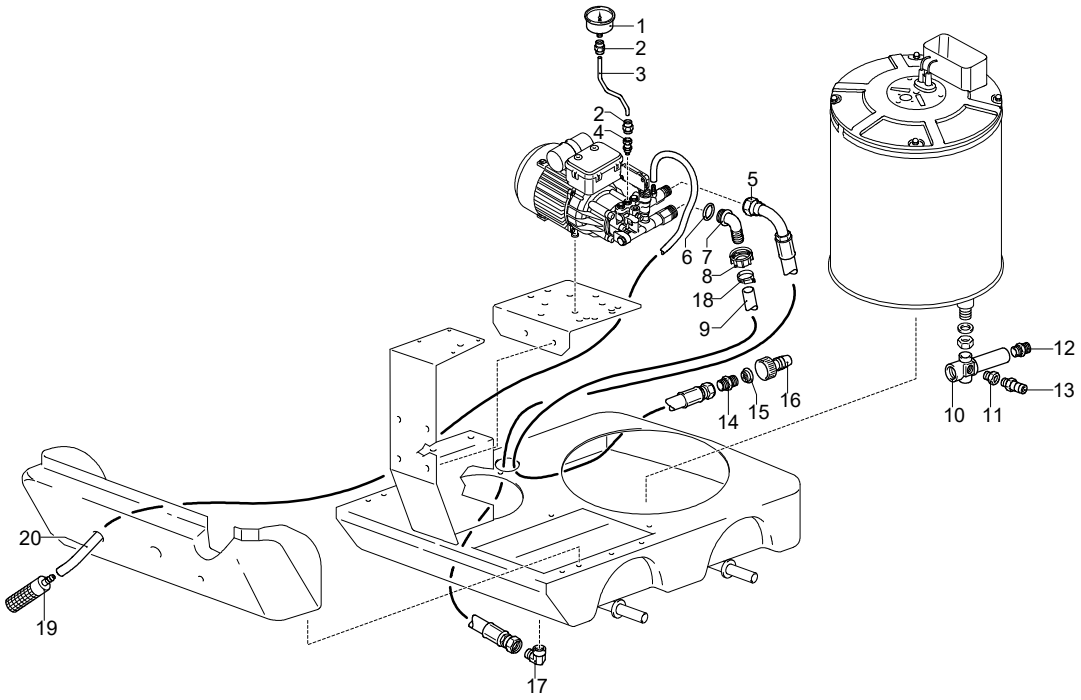

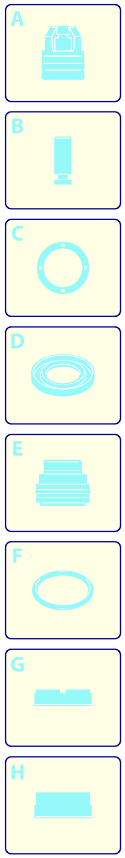

Validity	Pos.	Code	Description	Q
	1	3163130	Pressure gauge	1
	2	3161250	Fitting	2
	3	3163090	Pipe	1
	4	3164390	Fitting	1
	5	3161320	Pipe	1
	6	3161030	Gasket	1
	7	3161120	Fitting	1
	8	3160490	Ring nut	1
	9	3161280	Pipe	1
	10	3161160	Fitting	1
	11	3161240	Fitting	1
	12	3161150	Fitting	1
	13	3161400	Safety valve	1
	14	3160480	Fitting	1
	15	50713	Filter	1
	16	3163100	Fitting	1
	17	3160530	Fitting	1
	18	1140690	Clamp	1
	19	1341030	Filter	1
	20	3780380	Detergent hose	1

UN_CE_1592-MR

Model 5640

Version:

Serial number:

Code: **25670**

26/04/2018

230 V - 50 Hz | **schuko**

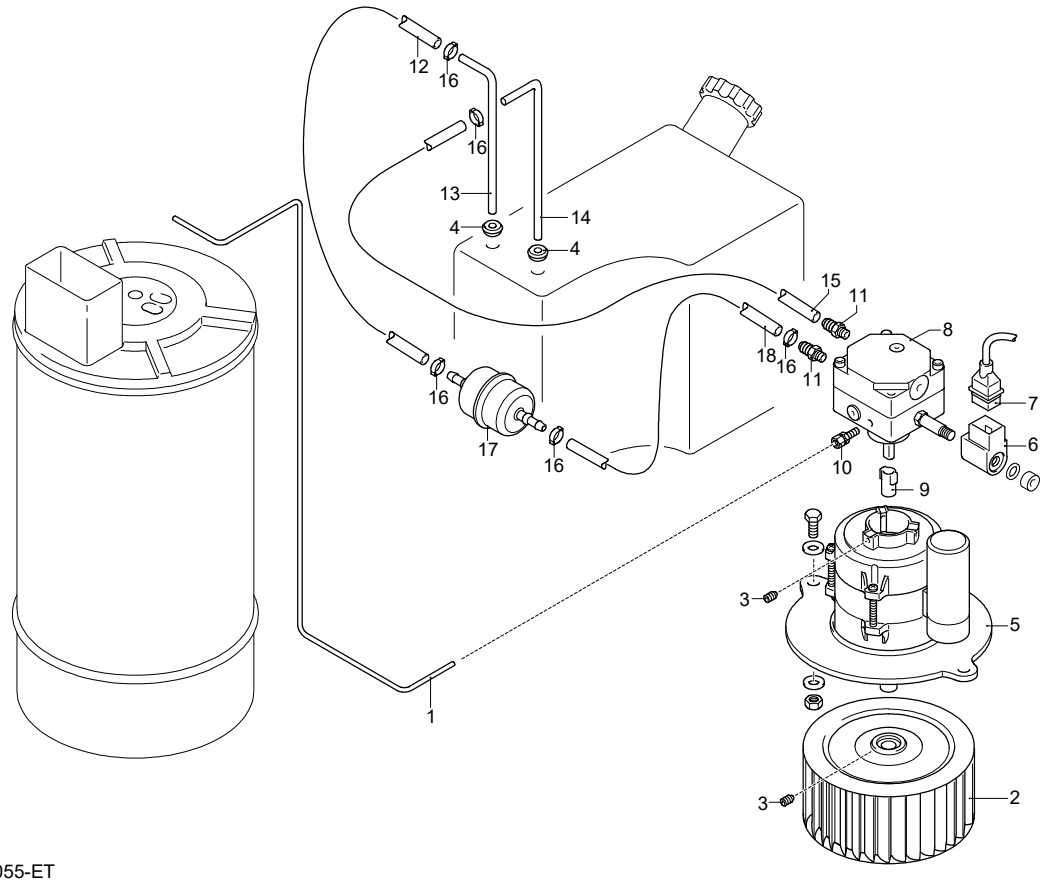

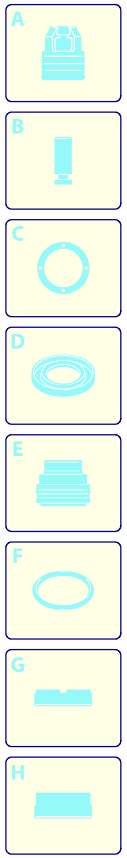

Validity	Pos.	Code	Description	Q
	1	3163190	Pipe	1
	2	3161820	Fan	1
	3	3163540	Screw	1
	4	3161050	Gland	2
	5	3163490	Motor	1
	6	3160320	Solenoid	1
	7	3161440	Cable	1
	8	3163040	Pump	1
	9	3160300	Coupling	1
	10	3160330	Fitting	1
	11	3160340	Hose tail	2
	12	3161590	Pipe	1
	13	3163780	Pipe	1
	14	3161660	Pipe	1
	15	3161580	Pipe	1
	16	3162060	Clamp	5
	17	3163050	Filter	1
	18	3161600	Pipe	1

UN_CE_1055-ET

Model 5640

Version:

Serial number:

Code: **25670**

26/04/2018

230 V - 50 Hz | **schuko**

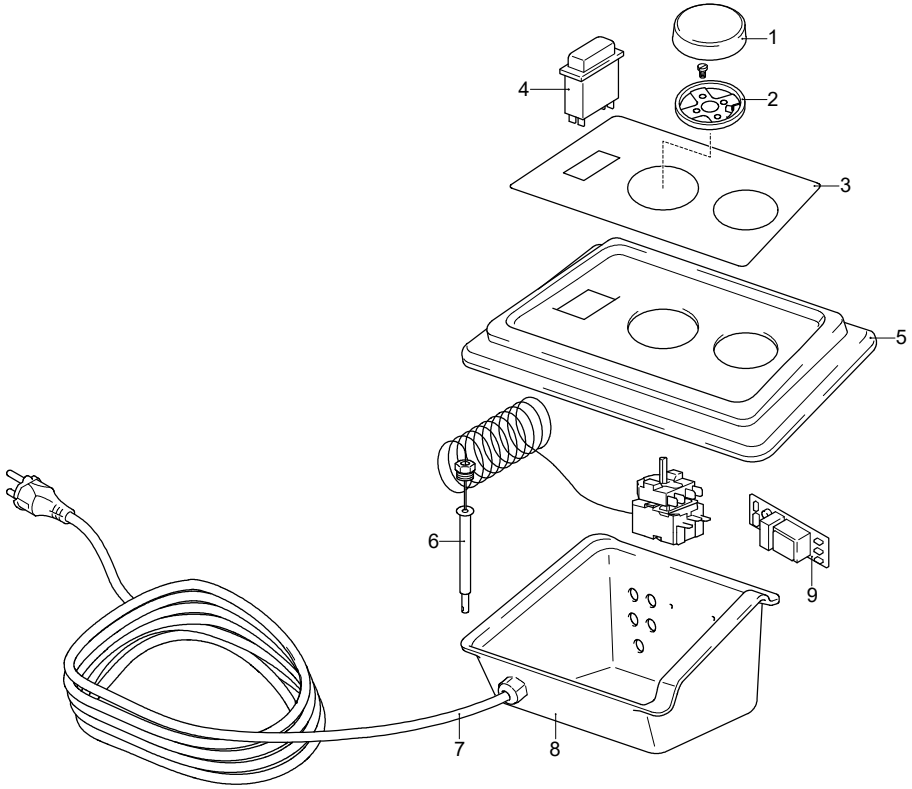

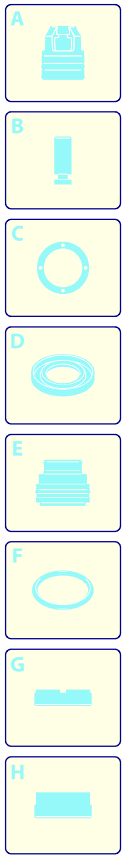

Validity	Pos.	Code	Description	Q
	1	3161960	Knob	1
	2	3161990	Support	1
	3	3163120	Plate	1
	4	50721	Switch	1
	5	3163010	Support	1
	6	50720	Thermostat	1
	7	1760450	Cable	1
	8	3163000	Box	1
	9	3162790	Board	1

UN_CE_1591-MR

Model 5640

Version:

Serial number:

Code: **25670**

26/04/2018

230 V - 50 Hz | **schuko**

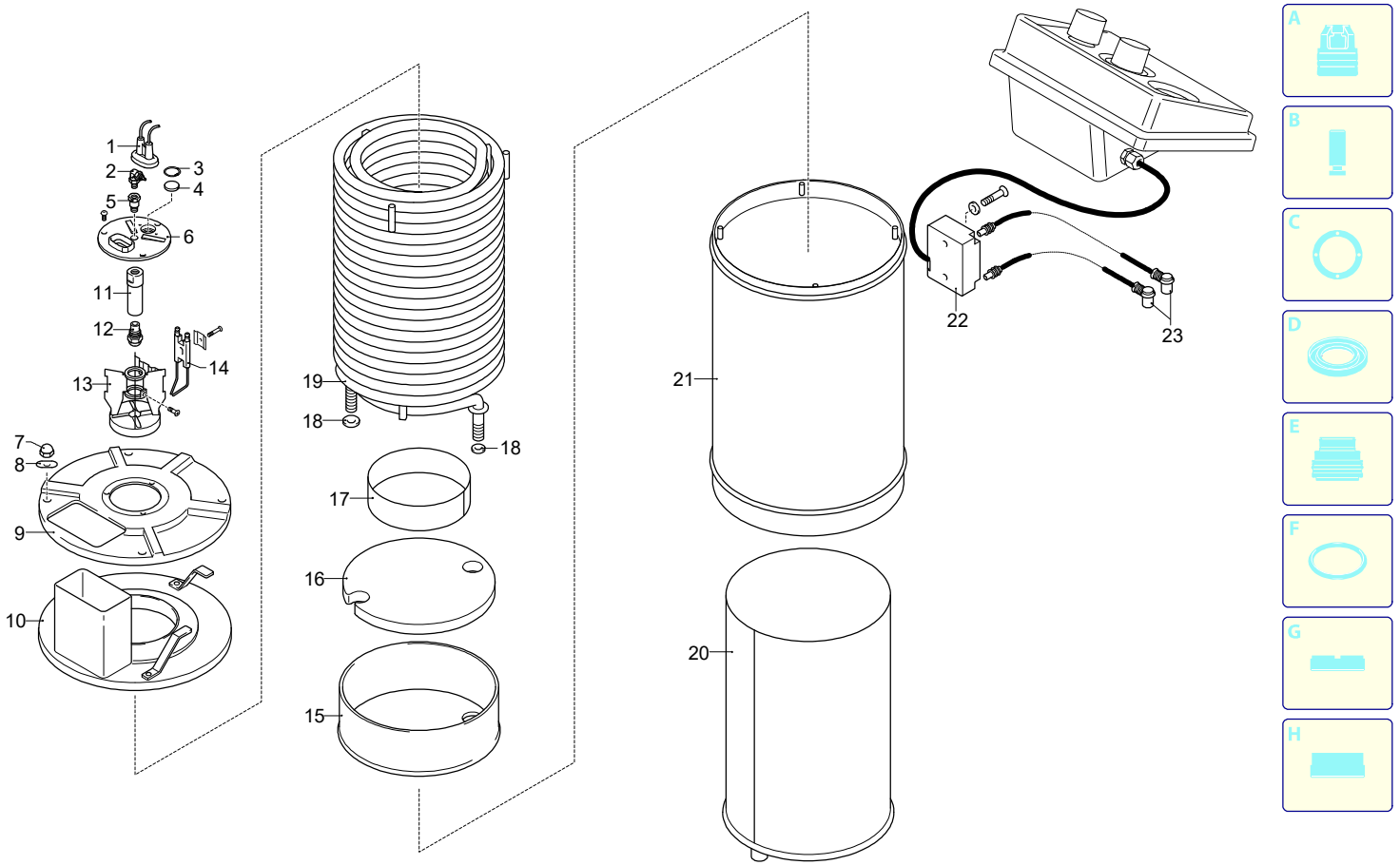

Validity	Pos.	Code	Description	Q
	1	3162370	Guard	1
	2	3161100	Fitting	1
	3	3162030	Ring	1
	4	3161860	Glass	1
	5	3161230	Fitting	1
	6	3161840	Plate	1
	7	3163960	Nut	4
	8	3163940	Washer	4
	9	3161790	Cover	1
	10	3161780	Cover	1
	11	3161870	Nozzle holder	1
	12	3161710	Nozzle	1
	13	3161560	Support	1
	14	3161890	Electrode	1
	15	3161770	Cover	1
	16	3161830	Plate	1
	17	3161430	Ring	1
	18	3162040	Washer	2
	19	3161750	Pipe coil	1
	20	3161450	Boiler	1
	21	3163180	Body	1
	22	50717	Danfoss/Fida transformer	1
	23	3163210	Cable	1

UN_CE_1056-FP

Model 5640

Version:

Serial number:

Code: **25670**

26/04/2018

230 V - 50 Hz | **schuko**

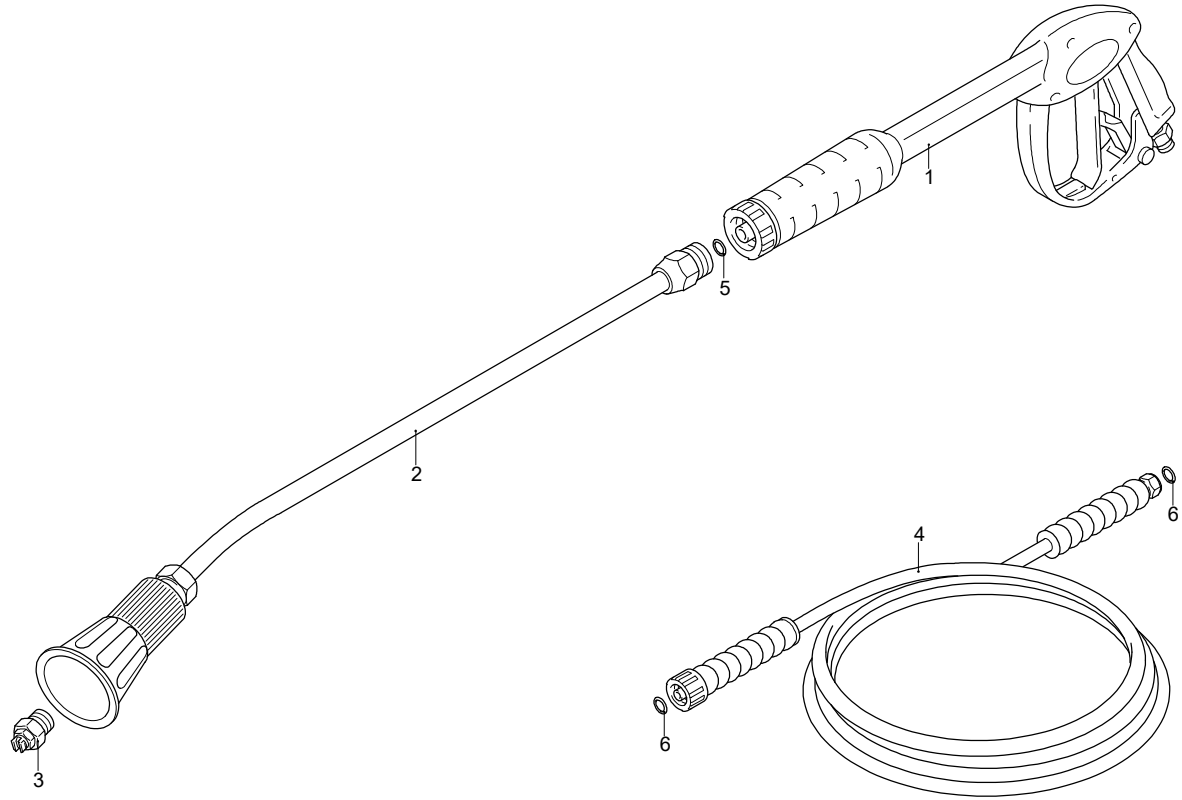

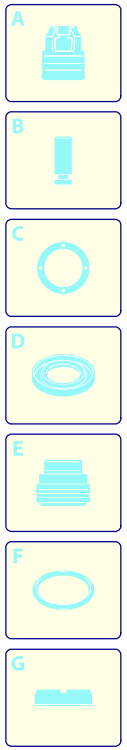

Validity	Pos.	Code	Description	Q
	1	41047	Gun	1
	2	40826	Lance	1
	3	3729	Nozzle	1
	4	50689	High pressure hose	1
	5	391000	O-ring	1
	6	2000570	O-ring	2

UN_CE_1651-EP