DAVEY



DAVEY Firefighter®

Model Number:
5150HD

WARRANTY
1 YEAR - Wet end*
1 YEAR - GP160 Honda GX motors

APPLICATIONS

Ideal for domestic outdoor firefighting, occasional water transfer, sheep jetting and emergency irrigation.

ECONOMICAL SINGLE STAGE SELF PRIMING PUMP

FEATURES & BENEFITS

- **Driven by a Honda GP160 engine** which is specially designed for domestic or infrequent use
- **Patented clamped impeller design** to enable longer impeller life, improved performance and easier disassembly in the case of blockage.
- **Thrust balanced impeller design** to extend engine life.
- **Pump casing, diffusers and impellers manufactured from quality corrosion resistant marine grade aluminium** for long life.
- **3 way discharge port** for easy installation with a choice of plumbing sizes.
- **Patented floating impeller neckrings front and back.** The front neckring helps improve pumping efficiency, the back neckring helps extend seal life and dramatically reduce engine wear.
- **Self priming from 7m** for more versatile installation options.
- **Large priming and drain port with bayonet fit plugs.** Plugs have safety retention system, plus are available with 1/4" tapping to accept pressure gauges or drain cocks.
- **The new GP160 is based on the proven design of its heavy duty brother, the GX160.** The difference is in the modification of some components to better suit the less arduous requirements of the normal home owner where annual usage may be no more than 150 hours.
- **Where your application requires frequent and long hours of usage Davey recommend the extensive range of Davey 5 Series Firefighter pumps equipped with Honda GX series engines.** Honda GP160 engines conform to the environmental requirements of the European EPA standards, to help look after the environment.

Engine Driven Pumps

DAVEY

OPERATING LIMITS		
Flow capacities to	415 L/min	
Maximum total head	65m	
Maximum suction lift	7m	
Maximum water temperature	50°C	
Minimum water temperature	1°C	
Maximum casing pressure	1000kPa	
Minimum suction pipe size	1 1/2"	
Suction pipe strainer	Required	
Inlet size	1 1/2"	
Outlet sizes	3 Way –	1 x 1 1/2" BSP(M) 2 x 1" BSP(M)

ENGINE DATA	
Engine brand	Honda
Engine model	GP160
Engine type	Overhead valve
Displacement (cc)	163
Fuel tank (litres)	3.1
Oil capacity (litres)	0.6
Compression ratio	8.5 : 1
Air filter type	Twin stage – foam prefilter with paper element final filter
Spark arrestor	YES
Approximate fuel consumption @ full load @ 3600 rpm	1.4 L/hr
dBa @ 4m @ 3600 rpm @ full head	85

INSTALLATION AND PRIMING

- Fit strainer to bottom of suction pipe; a foot valve is not required.
- To prime, fill pump body with water then allow pump to run until drawing water.

MATERIALS OF CONSTRUCTION	
PART	MATERIAL
Suction cover	Marine grade aluminium (AS605)
Diffuser	Marine grade aluminium (AS605)
Impeller	Marine grade aluminium (AS605)
Casing / yoke	Marine grade aluminium (AS605)
Mechanical seal	Carbon / ceramic
Discharge / handle	Marine grade aluminium (AS605)
Casing bolts	Zinc plated steel
Yoke bolts	Stainless Steel
Flap valve / seal ring	Zinc body, hytrel seal
Neck ring, priming and drain plug	Glass filled nylon
Casing, priming and drain plug o-ring	Nitrile rubber
Discharge gasket	Hytrel

HYDRAULIC PERFORMANCE

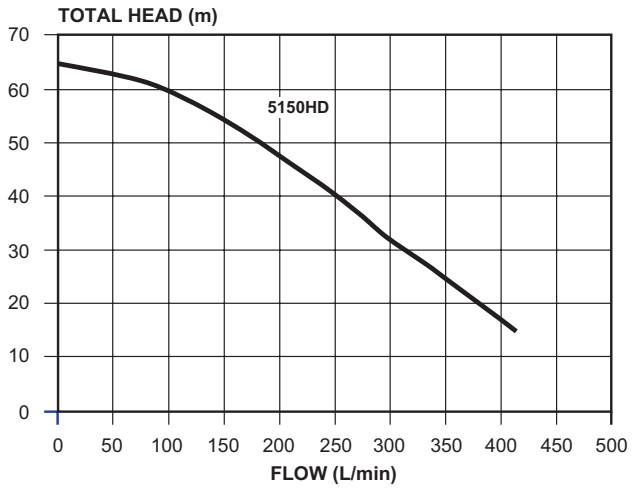

DIMENSIONS (mm)

Inlet BSP	Outlet BSP	Net Weight (kg)
1 1/2"M	2x1"M 1x1 1/2"M	21

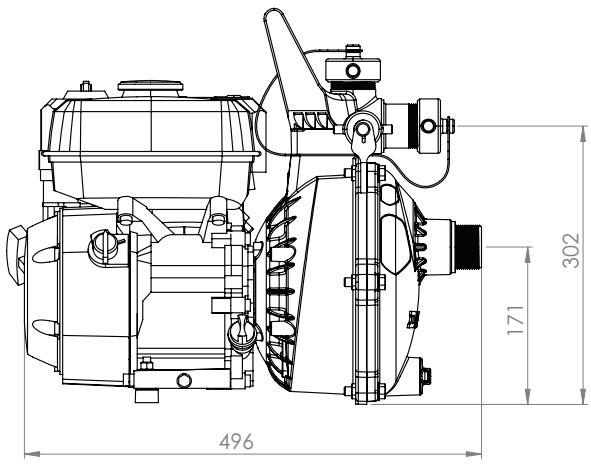

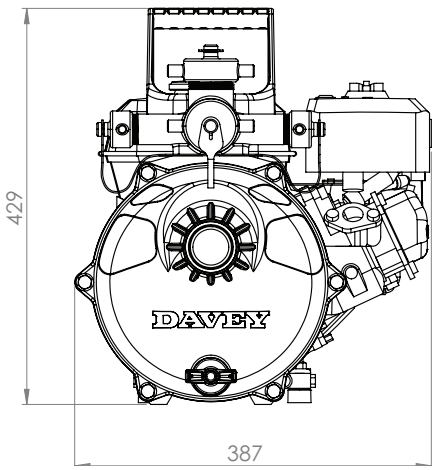

*NOTE: Honda manufacturers warranty

H/O & MFG SCORESBY
Certified System Quality ISO 9001
Certified System Environment ISO 14001

daveywater.com

This literature is not a complete guide to product usage. All images provided in this document are for illustration purposes only. Further information is available from your Davey Dealer, Davey Support Centre and from the relevant product Installation and Operating Instructions. Must be read in conjunction with the relevant product Installation and Operating Instructions and all applicable statutory requirements. Product specifications may change without notice.
® Davey is a registered trademark of Davey Water Products Pty Ltd. © Davey Water Products Pty Ltd 2025.

DAVEY

DWP0818-3/1025