5117.H4

GAS ENGINE 2.21:1 GEAR REDUCTION FOR PENTA/VX/VH/VY-SERIES PLUNGER PUMPS on up to 60 HP GAS ENGINES with 40mm SHAFTS

REQUIRES 20.3 OZ. 90W GEAR LUBE

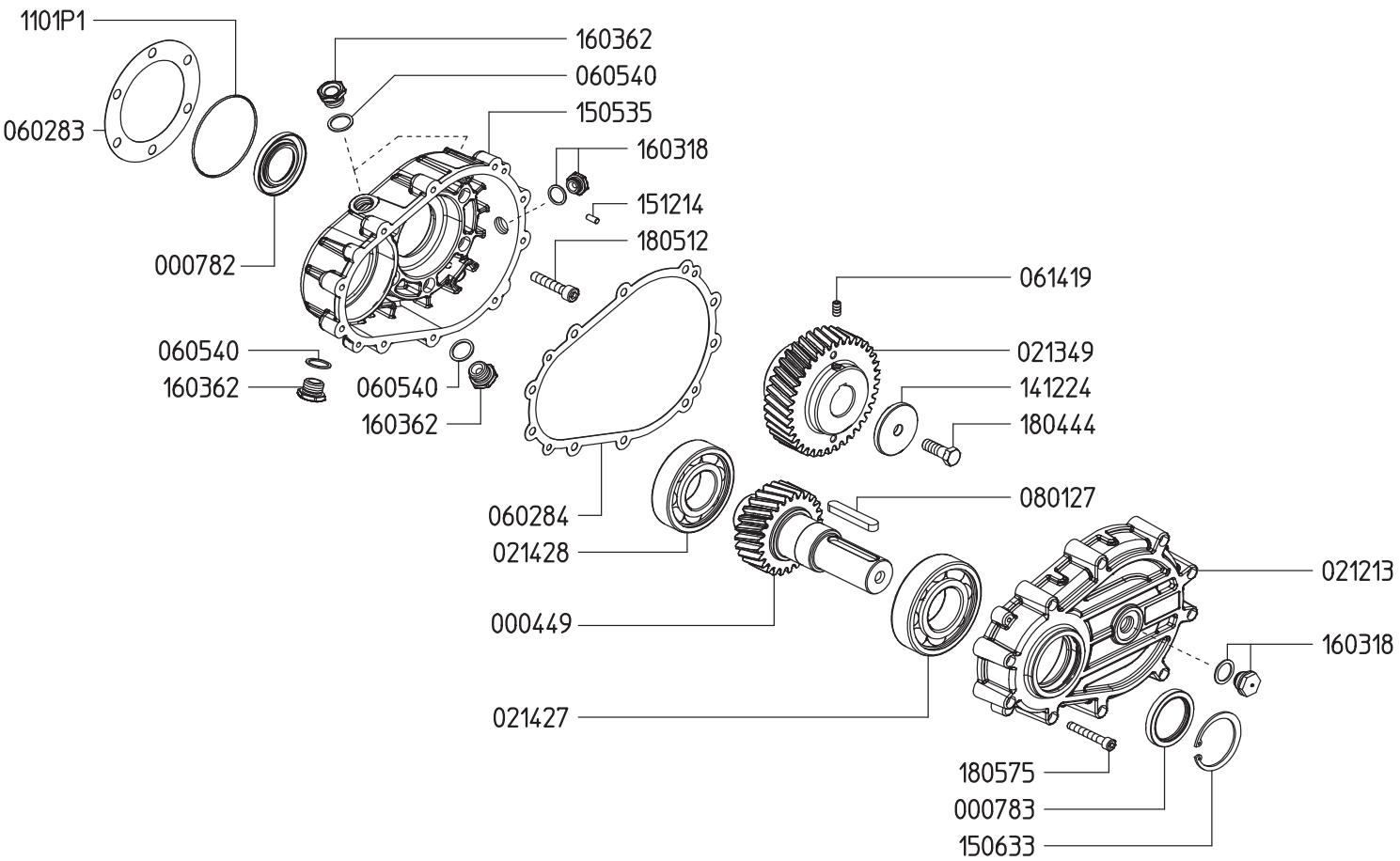

Part #	Description	Qty
0004.49	GEAR SHAFT "RX 122"	1
0007.82	OIL SEAL D40	1
0007.83	OIL SEAL D50	1
0212.13	REDUCER COVER "RX 115/118 122"	1
0213.49	GEAR "RX 122"	1
0214.27	BALL BEARING D50	1
0214.28	BALL BEARING D45	1
0602.83	GASKET "RX 115/118/122"	1
0602.84	GASKET "RX 115/118/122"	1
0605.40	GASKET D21.5	3
0614.19	SET SCREW M8X16 UNI5929	1

Part #	Description	Qty
0801.27	KEY A12X8X70 UNI6604-A	1
1101.P1	O-RING D91.70 (RIF.2362)	1
1412.24	WASHER D60	1
1505.35	GEAR BODY "RX 115/118/122"	1
1506.33	SNAP RING D65	1
1512.14	PLUG D6.0X14 UNI-EN28734	1
1603.18	OIL PLUG G1/2 + GASKET	2
1603.62	PLUG G1/2	3
1804.44	HEX SCREW M12X35 UNI5739	1
1805.12	ALLEN SCREW M10X50 UNI5931	6
1805.75	ALLEN SCREW M8X55 UNI5931	10