Model 4300L

Version:

Serial number:

Code: **51205**

05/06/2018

230 V - 50 Hz | **schuko**

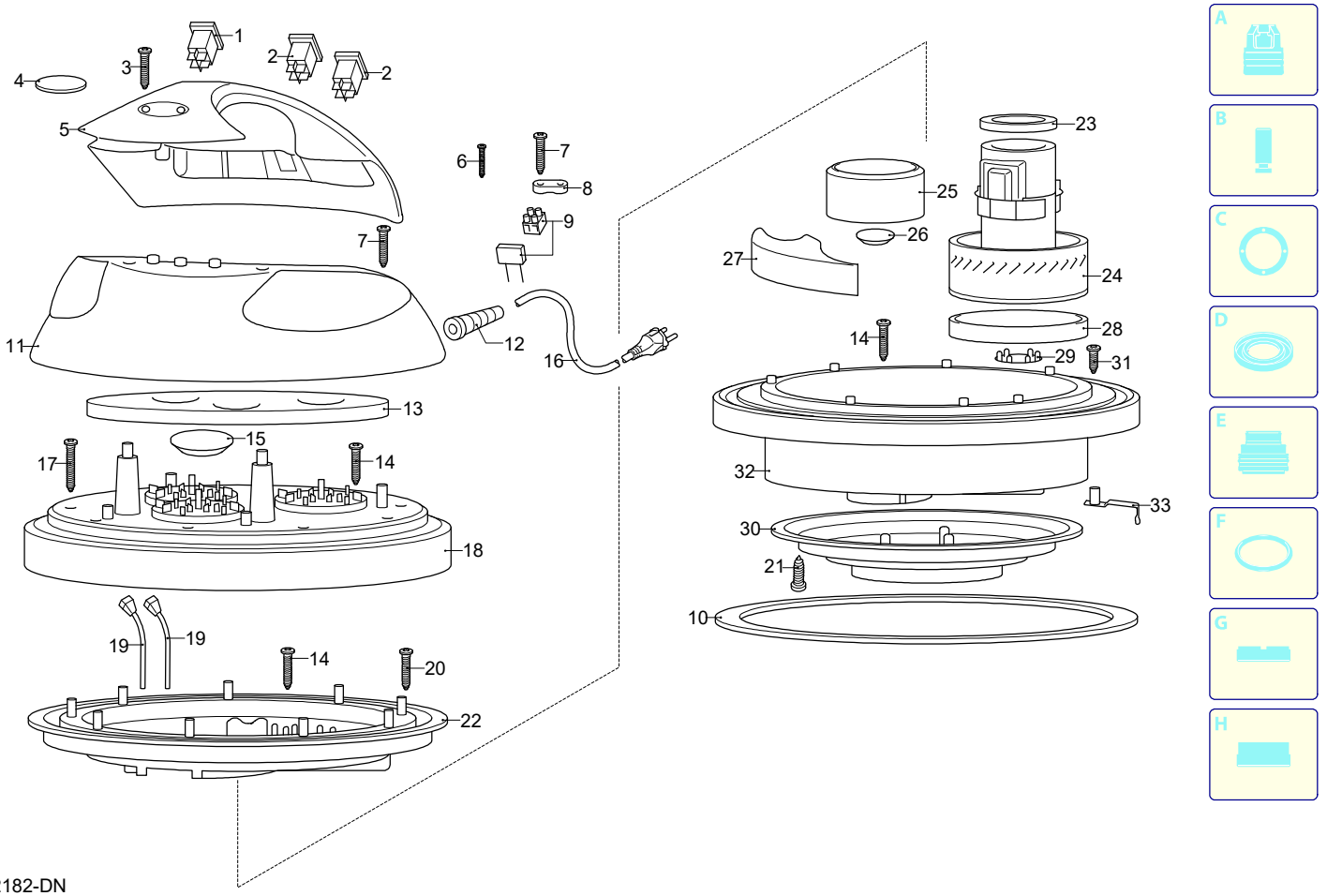

UN_CE_2182-DN

Validity	Pos.	Code	Description	Q
	1	51642	Switch	1
	2	50330	Switch	2
	3	50329	Screw	4
	4	50331	Plate	1
	5	50424	Handle	1
	6	50344	Screw	6
	7	50334	Screw	2
	8	50335	Cable retainer	1
	9	50337	Terminal board	1
	10	50360	Gasket	1
	11	50339	Cover	1
	12	50332	Gland	1
	13	50343	Filter	1
	14	50336	Screw	8
	15	50363	Plug	1
	16	50328	Cable	1
	17	50341	Screw	6
	18	50342	Guard	1
	19	50340	Cable	4
	20	51643	Screw	9
	21	50359	Screw	12
	22	50346	Lock	1
	23	50422	Spacer	2
	24	50423	Motor	2
	25	50361	Plug	1
	26	50362	Plug	1
	27	50353	Filter	3
	28	50354	Gasket	2
	29	50352	Valve	2
	30	50358	Conveyor	1
	31	51644	Screw	1
	32	50356	Base	1
	33	50357	Plate	1

Model 4300L

Version:

Serial number:

Code: **51205**

05/06/2018

230 V - 50 Hz | **schuko**

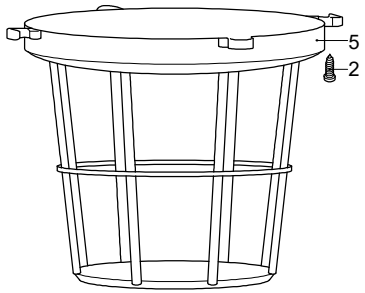

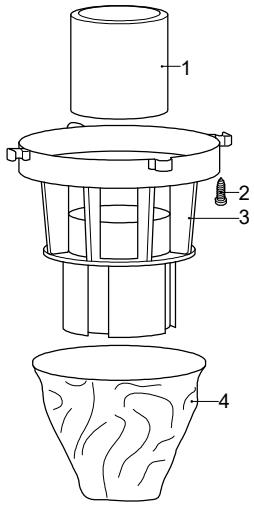

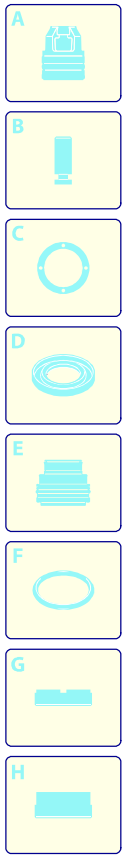

Validity	Pos.	Code	Description	Q
	1	50364	Float	1
	2	50365	Screw	7
	3	50366	Support	1
	4	51070	Filter	1
	5	50367	Support	1

UN_CE_2183-DN

Model 4300L

Version:

Serial number:

Code: **51205**

05/06/2018

230 V - 50 Hz | **schuko**

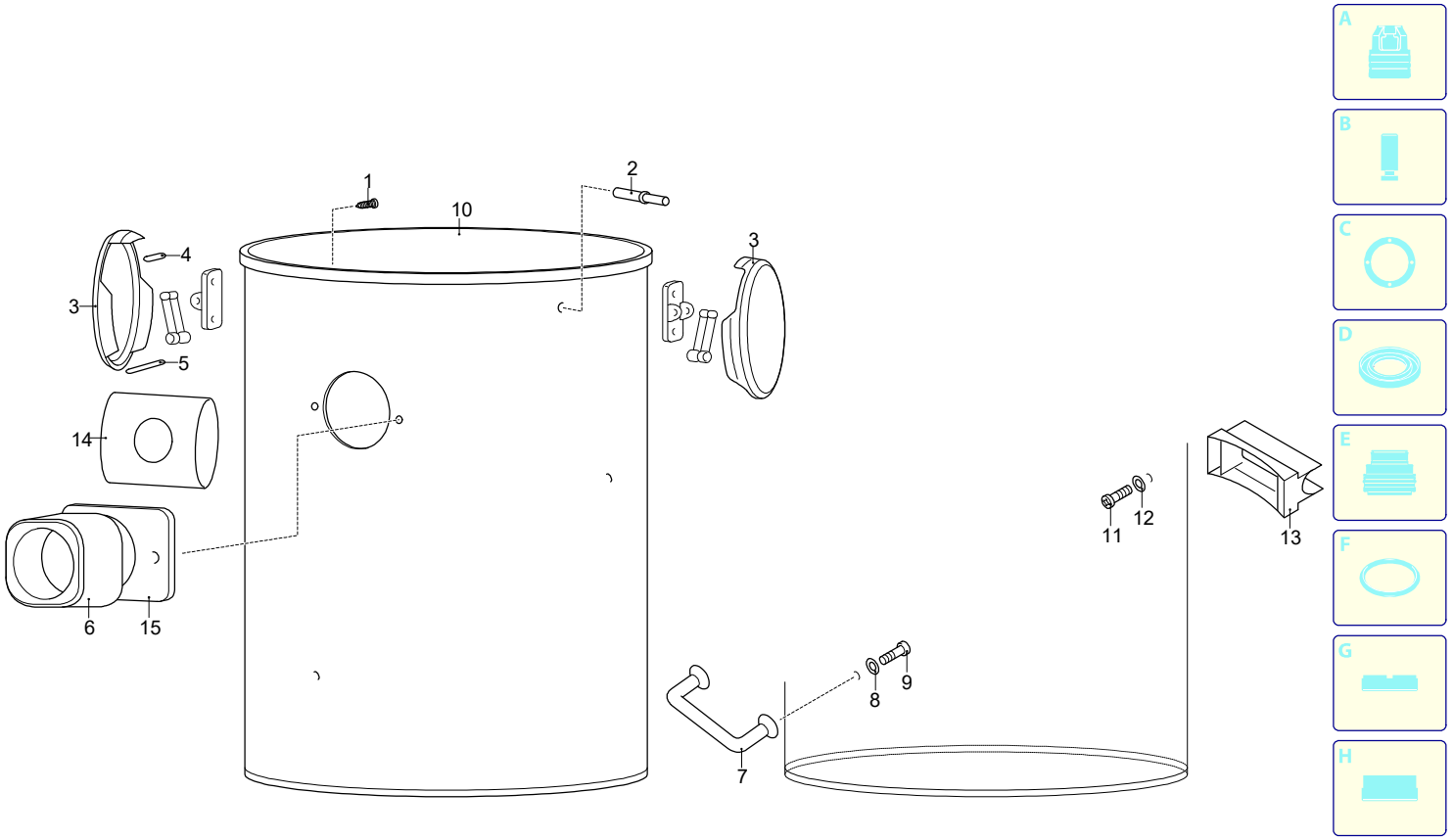

Validity	Pos.	Code	Description	Q
	1	50334	Screw	2
	2	50374	Rivet	4
	3	50375	Hook	2
	4	50376	Pin	2
	5	50377	Pin	2
	6	50378	Orifice	1
	7	50379	Handle	1
	8	50380	Washer	2
	9	50381	Screw	2
	10	50382	Tank	1
	11	50329	Screw	4
	12	50380	Washer	2
	13	50383	Hinge	1
	14	50277	Guard	1
	15	51668	Gasket	1

UN_CE_2184-DN

Model 4300L

Version:

Serial number:

Code: **51205**

05/06/2018

230 V - 50 Hz | **schuko**

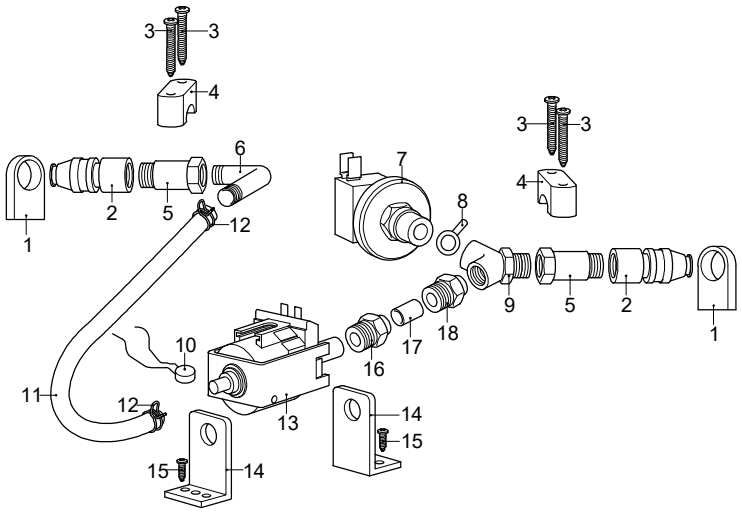

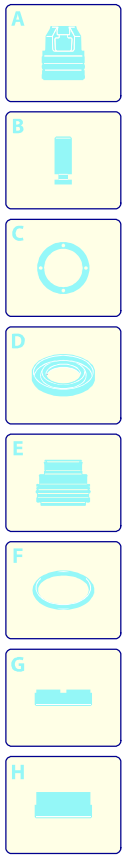

Validity	Pos.	Code	Description	Q
	1	51645	Bracket	2
	2	51646	Fitting	2
	3	51471	Handle	4
	4	51647	Tube clip	2
	5	51648	Extension	2
	6	51649	Fitting	1
	7	51650	Pressure switch	1
	8	51651	Terminal	1
	9	51652	Fitting	1
	10	51653	Plug	1
	11	51663	Pipe	1
	12	51655	Clamp	1
	13	51656	Pump	1
	14	51657	Support	2
	15	50359	Screw	1
	16	51658	Fitting	1
	17	51663	Pipe	1
	18	51660	Fitting	1

Model 4300L

Version:

Serial number:

Code: **51205**

05/06/2018

230 V - 50 Hz | **schuko**

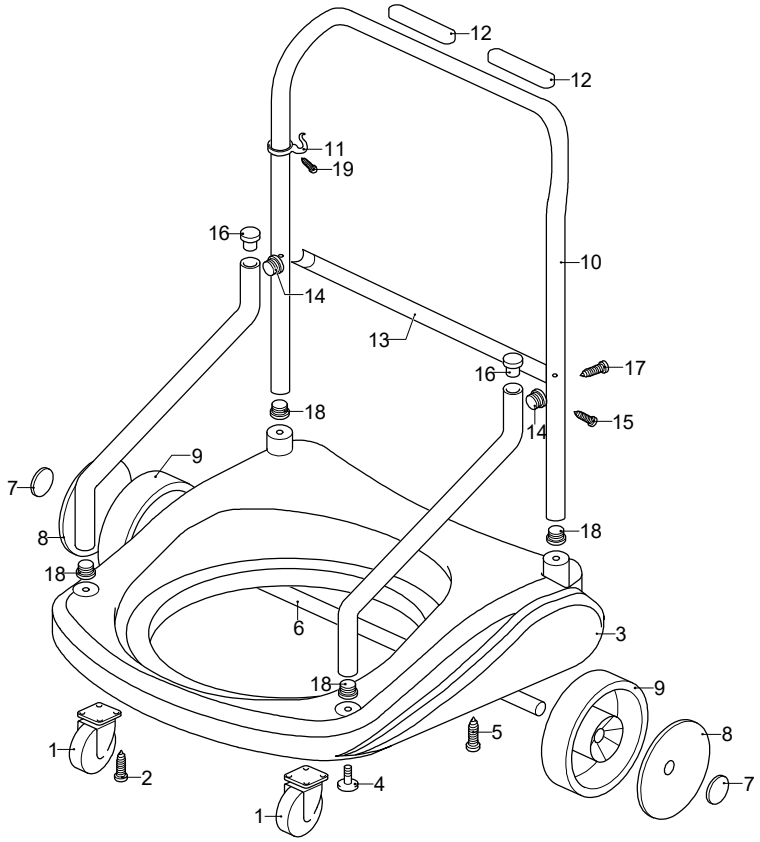

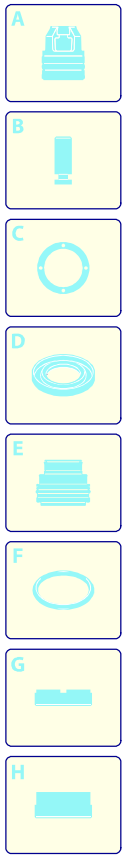

Validity	Pos.	Code	Description	Q
	1	50311	Wheel	2
	2	50359	Screw	8
	3	50390	Body	1
	4	50391	Screw	4
	5	50336	Screw	2
	6	50396	Pipe	1
	7	50308	Lock	2
	8	50309	Guard	2
	9	50310	Wheel	2
	10	50384	Handle	1
	11	50385	Hook	1
	12	50387	Knob	2
	13	50388	Connector	2
	14	50389	Spacer	2
	15	50393	Screw	2
	16	50395	Plug	2
	17	50394	Screw	2
	18	50396	Pipe	2
	19	50397	Screw	1

UN_CE_2157-DN

Model 4300L

Version:

Serial number:

Code: **51205**

05/06/2018

230 V - 50 Hz | **schuko**

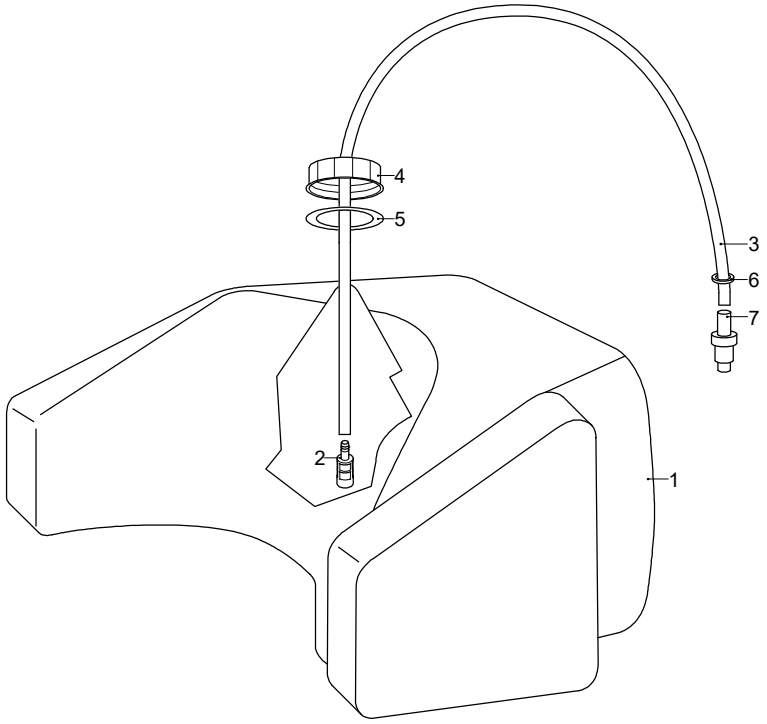

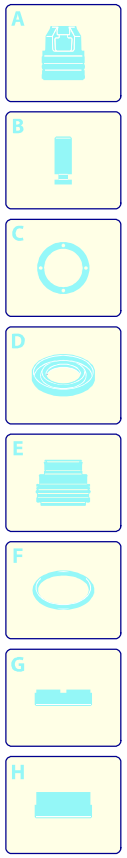

Validity	Pos.	Code	Description	Q
	1	51661	Tank	1
	2	51662	Filter	1
	3	51663	Pipe	1
	4	51664	Plug	1
	5	51665	Gasket	1
	6	51666	Clamp	2
	7	51667	Fitting	1

UN_CE_2186-EN