Model 4200L

Version:

Serial number:

Code: **51289**

05/06/2018

230 V - 50 Hz | **schuko**

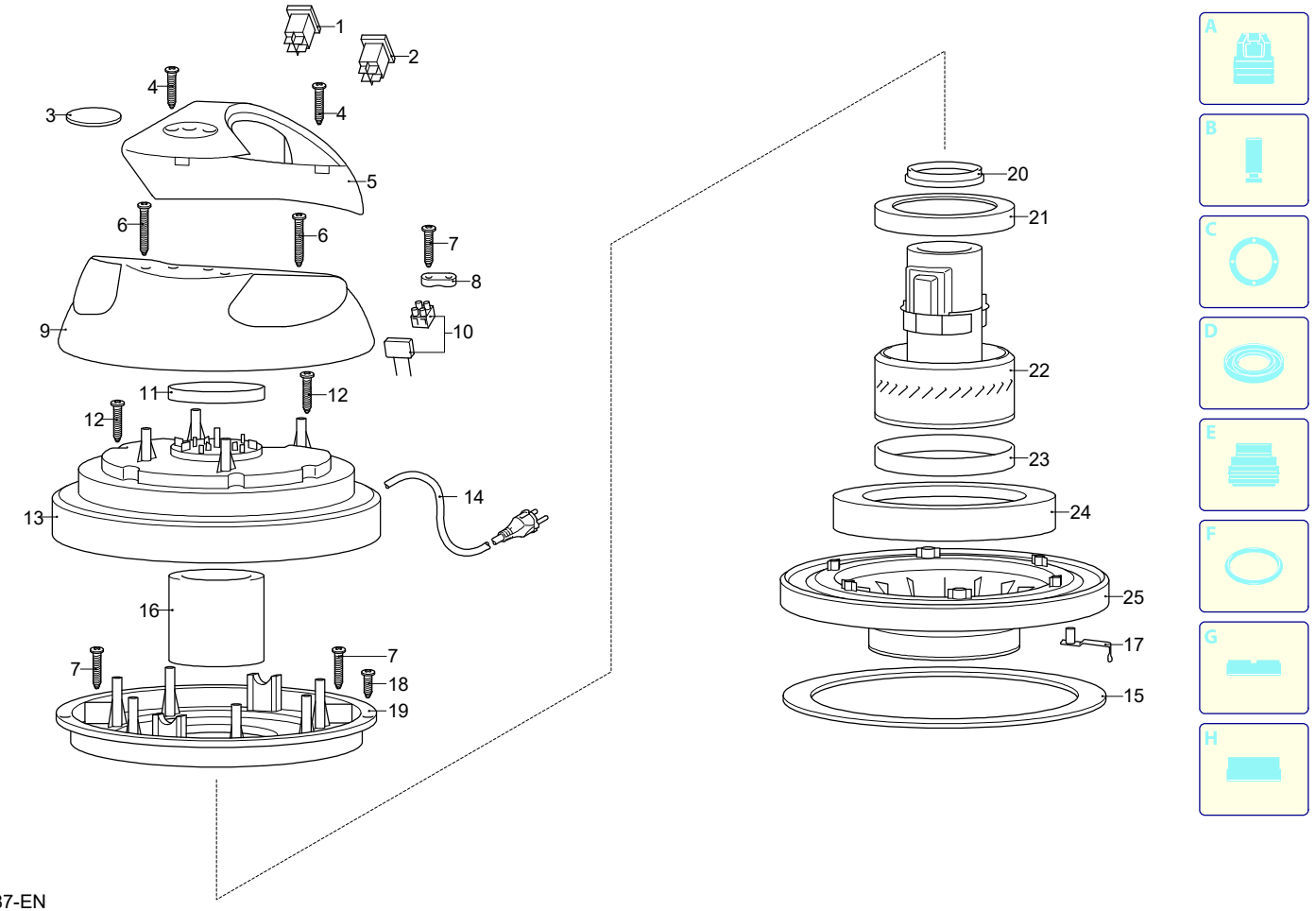

Validity	Pos.	Code	Description	Q
	1	51642	Switch	1
	2	50330	Switch	1
	3	50331	Plate	1
	4	50359	Screw	4
	5	50399	Handle	1
	6	50329	Screw	4
	7	50334	Screw	8
	8	50335	Cable retainer	1
	9	50401	Cover	1
	10	50400	Clamp	1
	11	50402	Filter	1
	12	50344	Screw	6
	13	50403	Guard	1
	14	50326	Cable	1
	15	50408	Gasket	1
	16	50404	Filter	1
	17	50411	Plate	1
	18	50410	Screw	1
	19	50405	Lock	1
	20	50347	Washer	1
	21	50350	Gasket	1
	22	50423	Motor	1
	23	50354	Gasket	1
	24	50406	Filter	1
	25	50407	Base	1

UN_CE_2187-EN

Model 4200L

Version:

Serial number:

Code: **51289**

05/06/2018

230 V - 50 Hz | **schuko**

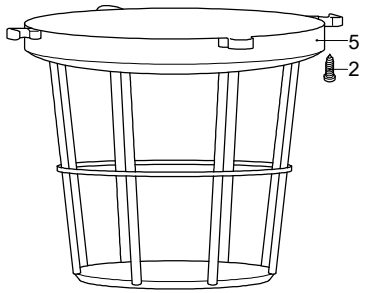

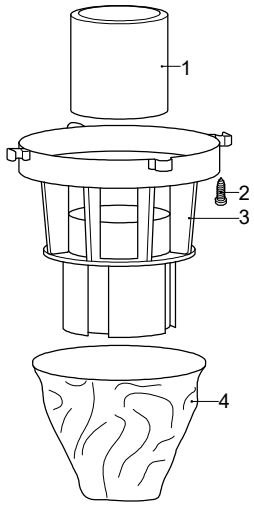

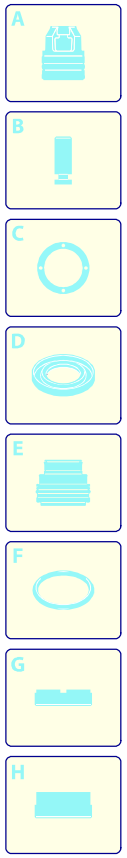

Validity	Pos.	Code	Description	Q
	1	50364	Float	1
	2	50365	Screw	7
	3	50366	Support	1
	4	51070	Filter	1
	5	50412	Support	1

UN_CE_2183-DN

Model 4200L

Version:

Serial number:

Code: **51289**

05/06/2018

230 V - 50 Hz | **schuko**

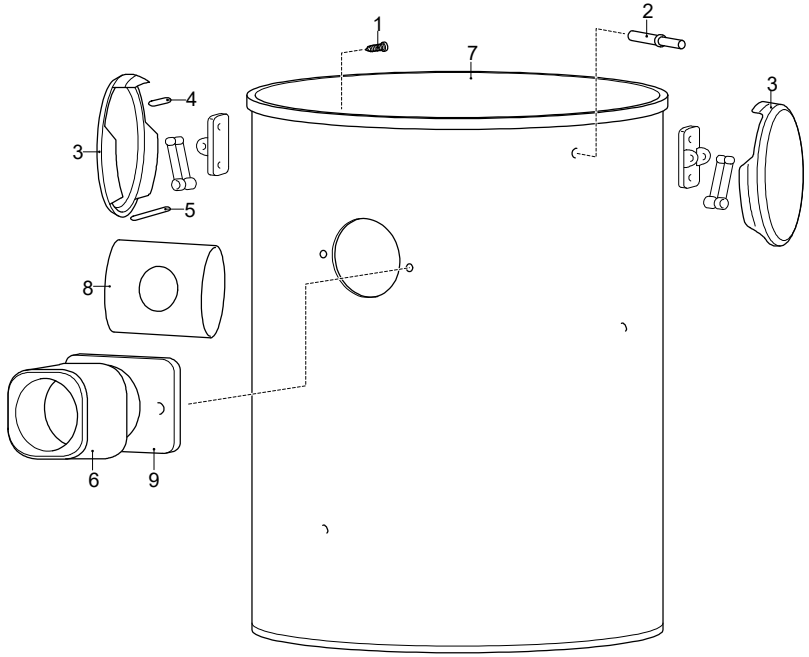

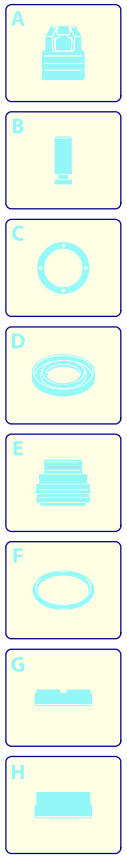

Validity	Pos.	Code	Description	Q
	1	50334	Screw	2
	2	51456	Rivet	4
	3	50375	Hook	2
	4	50376	Pin	2
	5	50377	Pin	2
	6	50378	Orifice	1
	7	51467	Tank	1
	8	50277	Guard	1
	9	51668	Gasket	1

Model 4200L

Version:

Serial number:

Code: **51289**

05/06/2018

230 V - 50 Hz | **schuko**

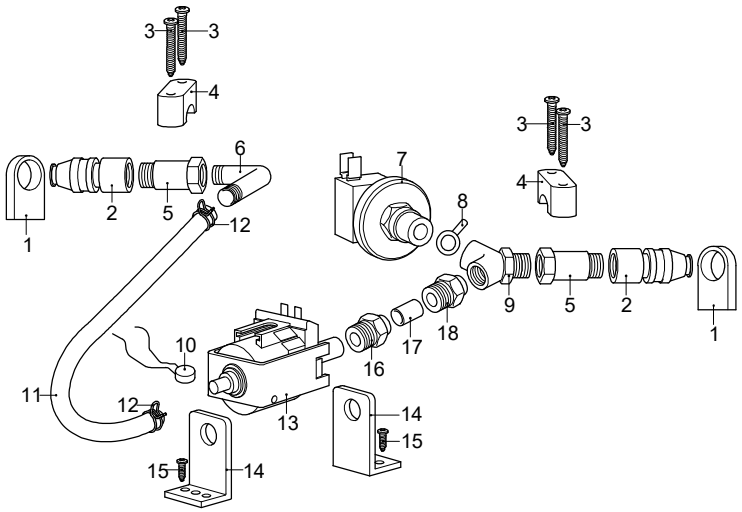

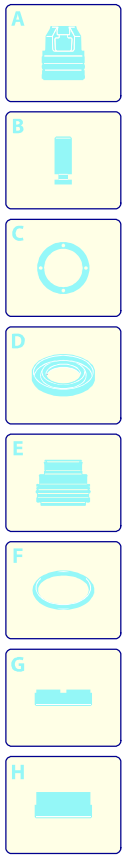

Validity	Pos.	Code	Description	Q
	1	51645	Bracket	2
	2	51646	Fitting	2
	3	51461	Screw	4
	4	51647	Tube clip	2
	5	51648		2
	6	51649		1
	7	51650	Pressure switch	1
	8	51651	Terminal	1
	9	51652	Fitting	1
	10	51653	Plug	1
	11	51663	Pipe	1
	12	51655	Clamp	1
	13	51656	Pump	1
	14	51657	Support	2
	15	50359	Screw	1
	16	51658	Fitting	1
	17	51663	Pipe	1
	18	51660	Fitting	1

UN_CE_2185-DN

Model 4200L

Version:

Serial number:

Code: **51289**

05/06/2018

230 V - 50 Hz | **schuko**

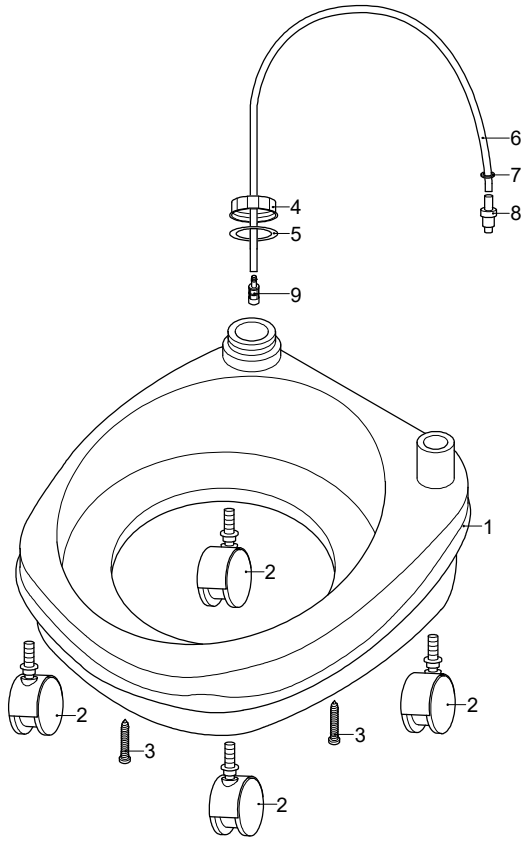

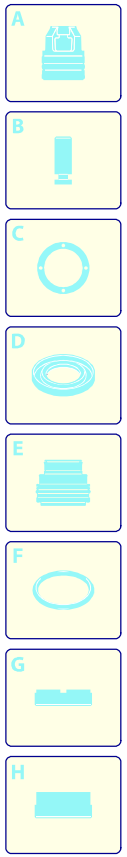

Validity	Pos.	Code	Description	Q
	1	51654	Body	1
	2	50420	Wheel	4
	3	50336	Screw	4
	4	51664	Plug	1
	5	51665	Gasket	1
	6	51663	Pipe	1
	7	51666	Clamp	2
	8	51667	Fitting	1
	9	51662	Filter	1

UN_CE_2189-EN