Model 399

Version:

Serial number:

Code: **14588**

20/06/2018

220-240 V - 50/60 Hz | **schuko**

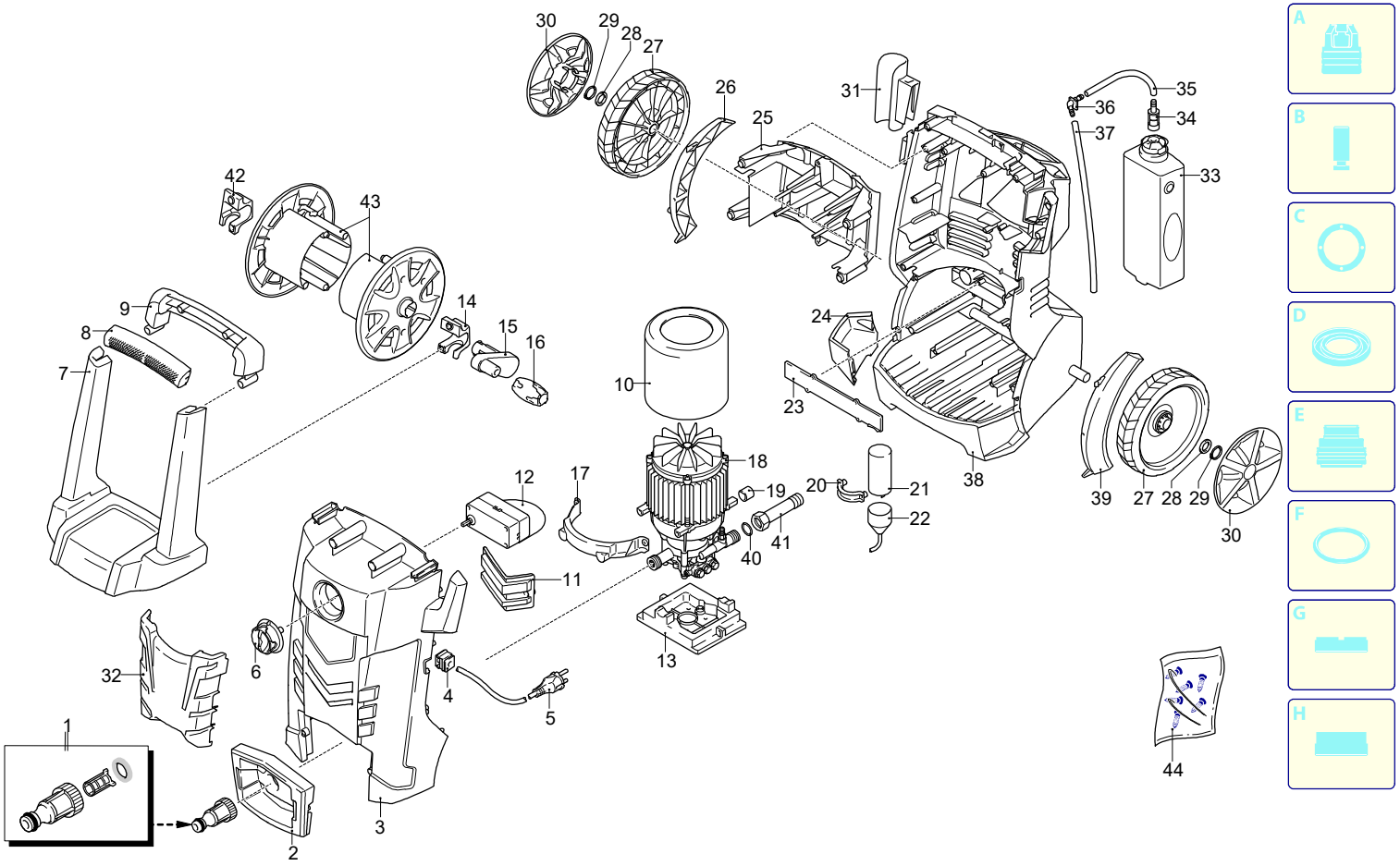

UN_CE_2463-FM

Validity	Pos.	Code	Description	Q
	1	3082130	Water coupling kit	1
	2	4100250	Guard	1
	3	4100222	Casing	1
	4	3080580	Cable gland	1
	5	3082360	Cable	1
	6	4100500	Knob	1
	7	4100270	Handle	1
	8	4100490	Knob	1
	9	4100280	Handle	1
	10	3440130	Fan cowling	1
	11	4100230	Guard	1
	12	4100850	Switch	1
	13	3441170	Support	1
	14	4100330	Bracket	1
	15	4101050	Lever	1
	16	4101060	Knob	1
	17	3440120	Bracket	1
	18	4101100	Electric pump assembly	1
	19	4101090	Rubber foot	2
	20	4101070	Bracket	1
	21	3081620	Capacitor	1
	22	4101080	Connector	1
	23	4100930	Guard	1
	24	4100640	Support	1
	25	4101000	Support	1
	26	4100620	Guard	1
	27	4100010	Wheel	2
	28	4101010	Lock	2
	29	4101020	Washer	2
	30	4100510	Guard	2
	31	4100630	Support	1
	32	4100530	Guard	1
	33	3440710	Tank	1
	34	3440720	Filter	1
	35	4100950	Pipe	1
	36	4100960	Fitting	1
	37	4100970	Pipe	1
	38	4100600	Base	1
	39	4100610	Guard	1
	40	3080410	O-ring	1
	41	3080400	Fitting	1
	42	4100340	Bracket	1
	43	4101040	Plate	2
	44	4100990	Screw kit	1

Model 399

Version:

Serial number:

Code: **14588**

20/06/2018

220-240 V - 50/60 Hz | **schuko**

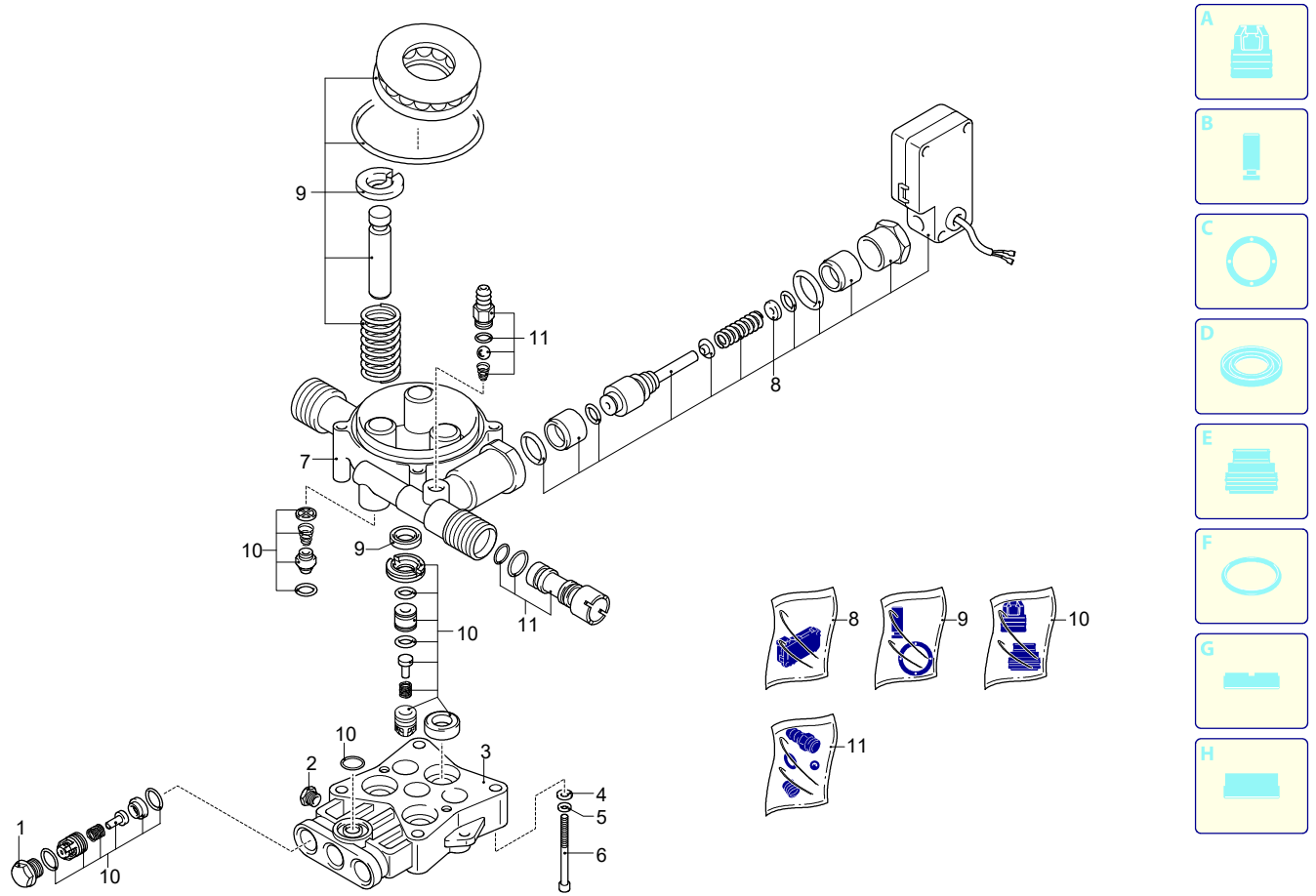

UN_CE_1377-JS

Validity	Pos.	Code	Description	Q
	1	3083210	Plug	3
	2	3081730	Screw	1
	3	3083220	Head	1
	4	3081760	Washer	4
	5	3081750	Washer	4
	6	3081740	Screw	4
	7	3083230	Pump body	1
	8	3440560	TSS kit	1
	9	3440570	Piston + seals kit	1
	10	3081290	Valves + seals kit	1
	11	3440610	Detergent suction kit	1

Model 399

Version:

Serial number:

Code: **14588**

20/06/2018

220-240 V - 50/60 Hz | **schuko**

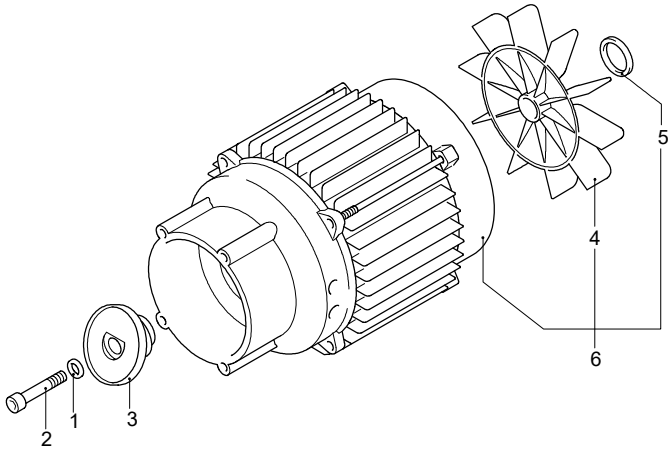

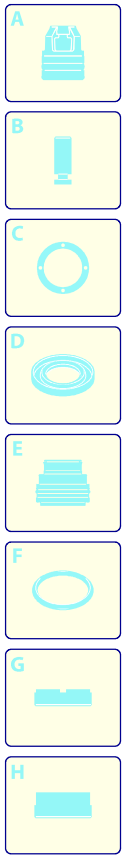

Validity	Pos.	Code	Description	Q
	1	3081750	Washer	1
	2	3081950	Screw	1
	3	4382090	Wobble plate	1
	4	3440370	Fan	1
	5	3441000	Ring	1
	6	4382130	Motor	1

UN_CE_0591-JS

Model 399

Version:

Serial number:

Code: **14588**

20/06/2018

220-240 V - 50/60 Hz | **schuko**

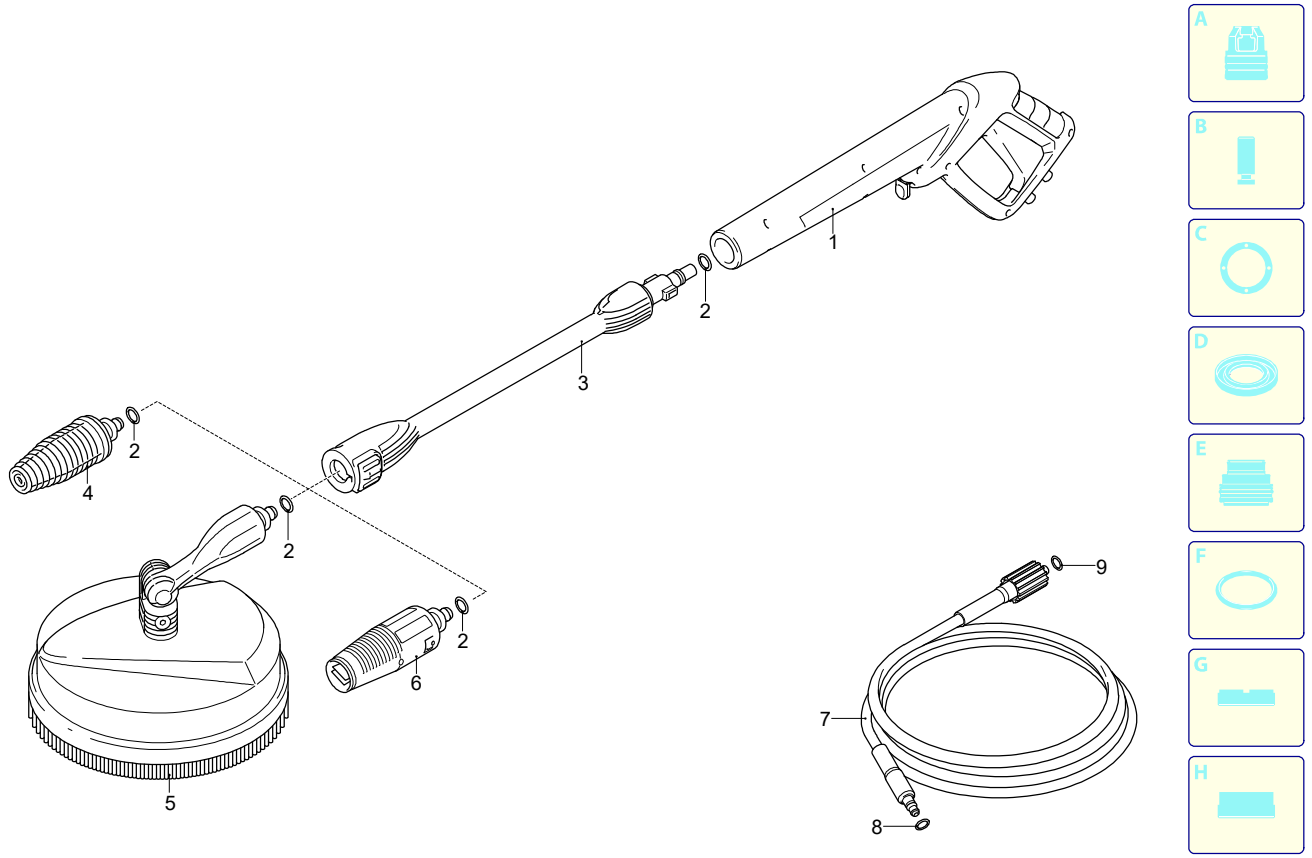

Validity	Pos.	Code	Description	Q
	1	4100781	Gun	1
	2	3083700	O-ring	4
	3	4100771	Extension	1
	4	4100800	Lance head	1
	5	3084354	Mini Patio	1
	6	4381820	Lance head	1
	7	4101940	High pressure hose	1
	8	3083380	O-ring	1
	9	3083400	O-ring	1

UN_CE_2163-DN