Model 386

Version:

Serial number:

Code: **14831**

24/06/2019

220-240 V - 50/60 Hz | **schuko**

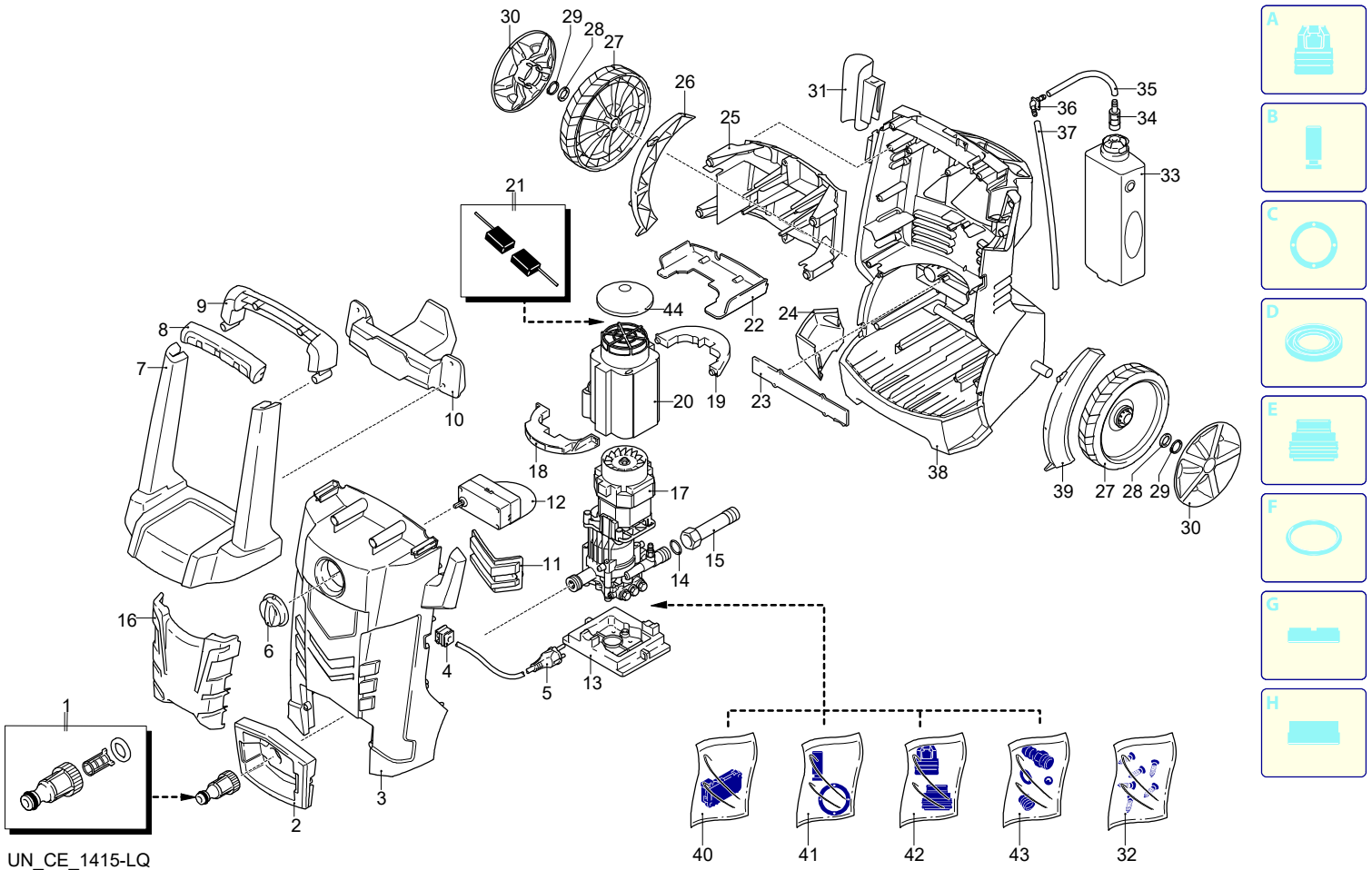

Validity	Pos.	Code	Description	Q
	1	3082130	Water coupling kit	1
	2	4100250	Guard	1
	3	4100222	Casing	1
	4	3080580	Cable gland	1
	5	3082360	Cable	1
	6	4100500	Knob	1
	7	4100270	Handle	1
	8	4100490	Knob	1
	9	4100280	Handle	1
	10	4100940	Support	1
	11	4100230	Guard	1
	12	4100850	Switch	1
	13	3441170	Support	1
	14	3080410	O-ring	1
	15	3441200	Fitting	1
	16	4100530	Guard	1
	17	4102410	Electric pump assembly	1
	18	4100860	Bracket	1
	19	4100870	Bracket	1
	20	4100890	Conveyor	1
	21	3082600	Brush kit for motor	1
	22	4100880	Bracket	1
	23	4100930	Guard	1
	24	4100640	Support	1
	25	4101000	Support	1
	26	4100620	Guard	1
	27	4100010	Wheel	2
	28	4101010	Lock	2
	29	4101020	Washer	2
	30	4100510	Guard	2
	31	4100630	Support	1
	32	4100990	Screw kit	1
	33	3440710	Tank	1
	34	3440720	Filter	1
	35	4100950	Pipe	1
	36	4100960	Fitting	1
	37	4100970	Pipe	1
	38	4100600	Base	1
	39	4100610	Guard	1
	40	3081280	TSS kit	1
	41	3081270	Piston + seals kit	1
	42	3081290	Valves + seals kit	1
	43	3440610	Detergent suction kit	1
	44	4101930	Plate	1

Model 386

Version:

Serial number:

Code: **14831**

24/06/2019

220-240 V - 50/60 Hz | **schuko**

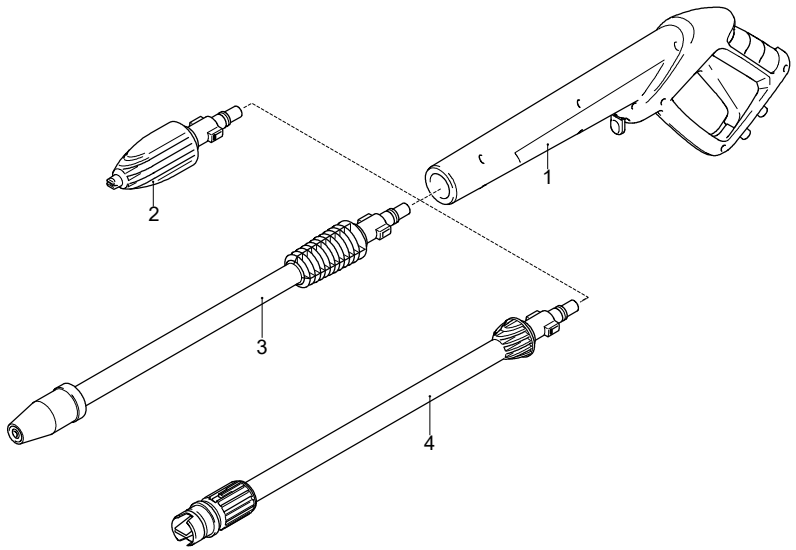

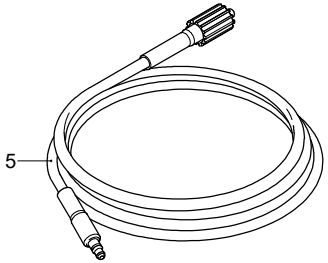

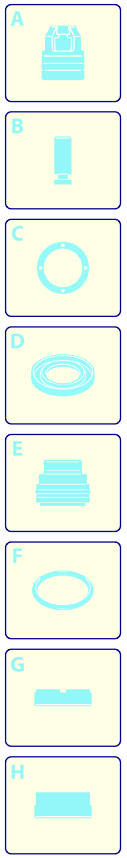

Validity	Pos.	Code	Description	Q
	1	4100781	Gun	1
	2	4100730	Lance head	1
	3	50971	Lance+rotopower	1
	4	4102380	Lance+lance head	1
	5	4101940	High pressure hose	1

UN_CE_1416-MS