Modello 3780

Version:

Serial number:

Code: **51929**

22/07/2019

230 V - 50 Hz | **schuko**

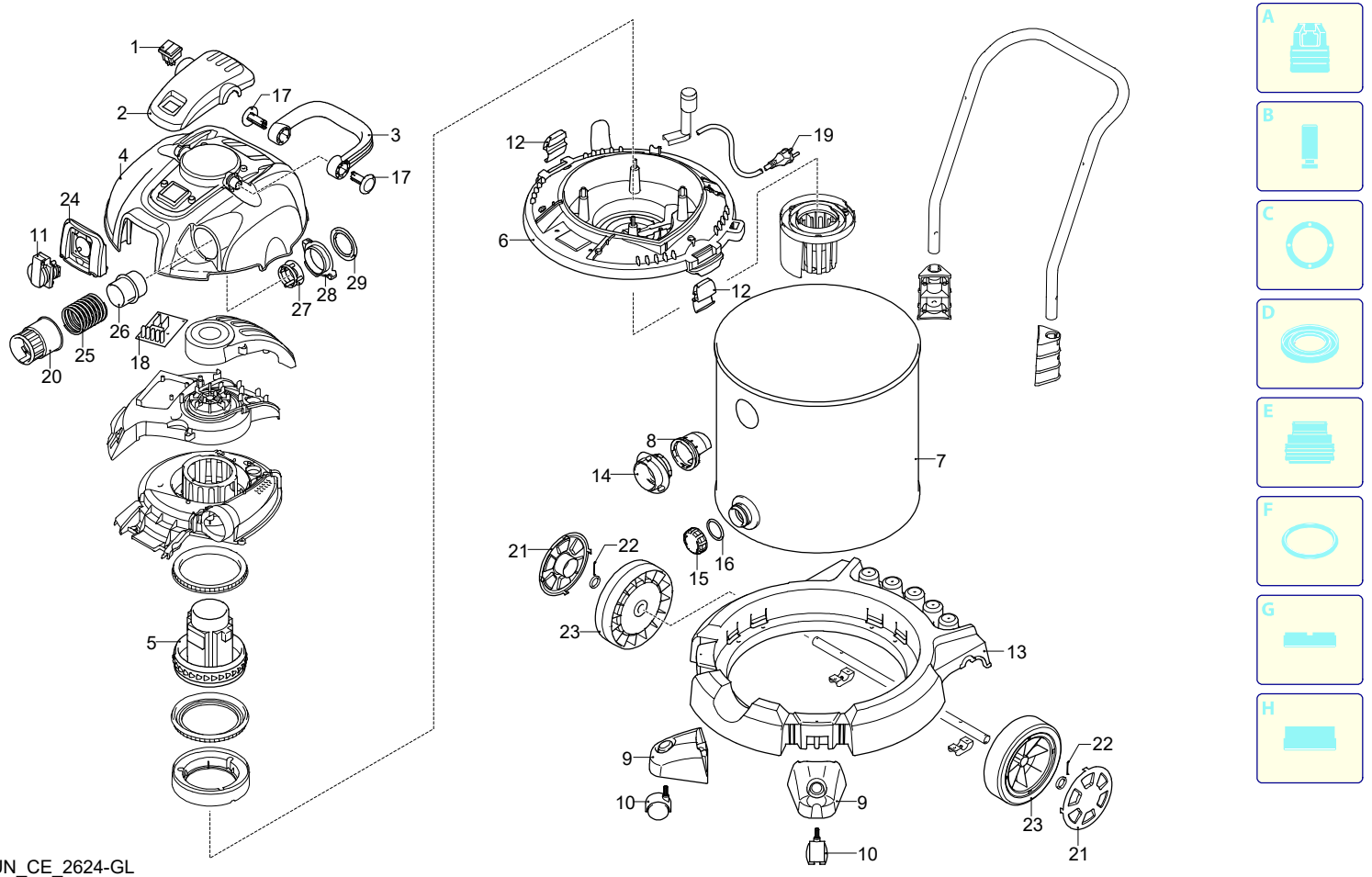

UN_CE_2624-GL

Validity	Pos.	Code	Description	Q
	1	4341010	Switch	1
	2	4341770	Guard	1
	3	4341150	Handle	1
	4	4341141	Cover	1
	5	4341050	Motor	1
	6	4341120	Base	1
	7	4341230	Tank	1
	8	4341300	Support	1
	9	4341100	Support	1
	10	4340990	Wheel	1
	11	4341020	Socket	1
	12	4341280	Hook	1
	13	4341290	Base	1
	14	4340091	Orifice	1
	15	4340951	Plug	1
	16	4340390	O-ring	1
	17	4341160	Guard	1
	18	4341030	Board	1
	19	4340980	Cable	1
	20	4341250	Orifice	1
	21	4340911	Guard	1
	22	4340900	Split pin	1
	23	4340890	Wheel	1
	24	4341130	Guard	1
	25	4341040	Spring	1
	26	4341260	Support	1
	27	4341110	Support	1
	28	4341190	Tank	1
	29	4341200	Gasket	1

Modello 3780

Version:

Serial number:

Code: **51929**

22/07/2019

230 V - 50 Hz | **schuko**

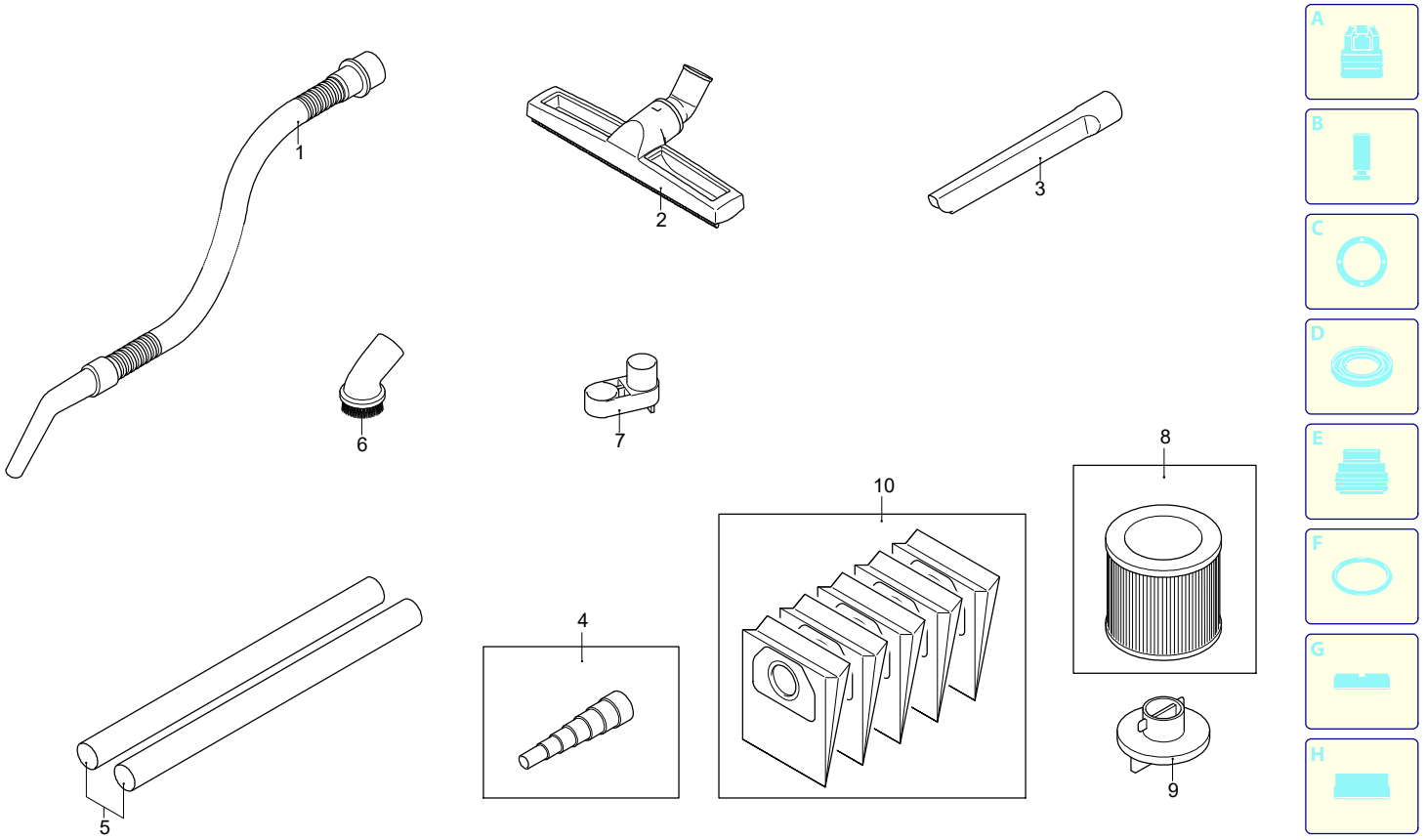

Validity	Pos.	Code	Description	Q
	1	4341320	Pipe	1
	2	4341330	Brush	1
	3	4341350	Lance	1
	4	46264	Adaptor	1
	5	4341380	Metal pipe (Q.ty 2)	1
	6	4341360	Fixed brush	1
	7	4341400	Accessories carrier	1
	8	46263	Cartridge filter (Q.ty 1)	1
	9	4341620	Lock	1
	10	46271	Paper filter (Q.ty 5)	1

UN_CE_2625-GL