Modello 3770

Version:

Serial number:

Code: **51928**

22/07/2019

230 V - 50 Hz | **schuko**

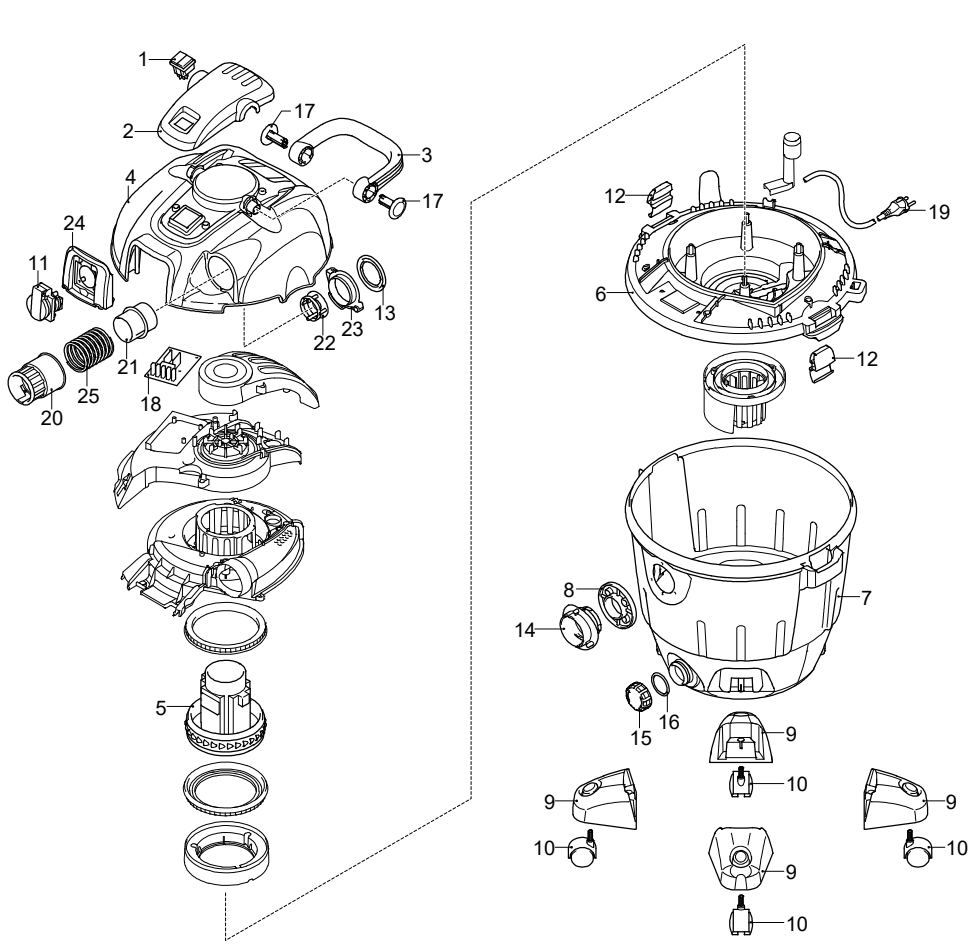

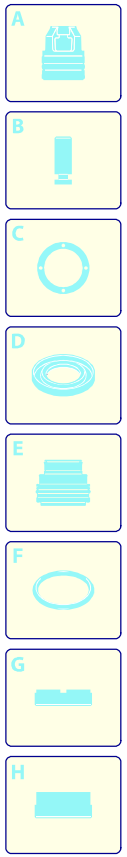

Validity	Pos.	Code	Description	Q
	1	4341010	Switch	1
	2	4341770	Guard	1
	3	4341150	Handle	1
	4	4341141	Cover	1
	5	4341050	Motor	1
	6	4341120	Base	1
	7	4341091	Tank	1
	8	4340100	Support	1
	9	4341100	Support	1
	10	4340990	Wheel	1
	11	4341020	Socket	1
	12	4341081	Hook	1
	13	4341200	Gasket	1
	14	4340091	Orifice	1
	15	4340951	Plug	1
	16	4340390	O-ring	1
	17	4341160	Guard	1
	18	4341030	Board	1
	19	4340980	Cable	1
	20	4341170	Orifice	1
	21	4341180	Support	1
	22	4341110	Support	1
	23	4341190	Tank	1
	24	4341130	Guard	1
	25	4341040	Spring	1

UN_CE_2622-GL

Modello 3770

Version:

Serial number:

Code: **51928**

22/07/2019

230 V - 50 Hz | **schuko**

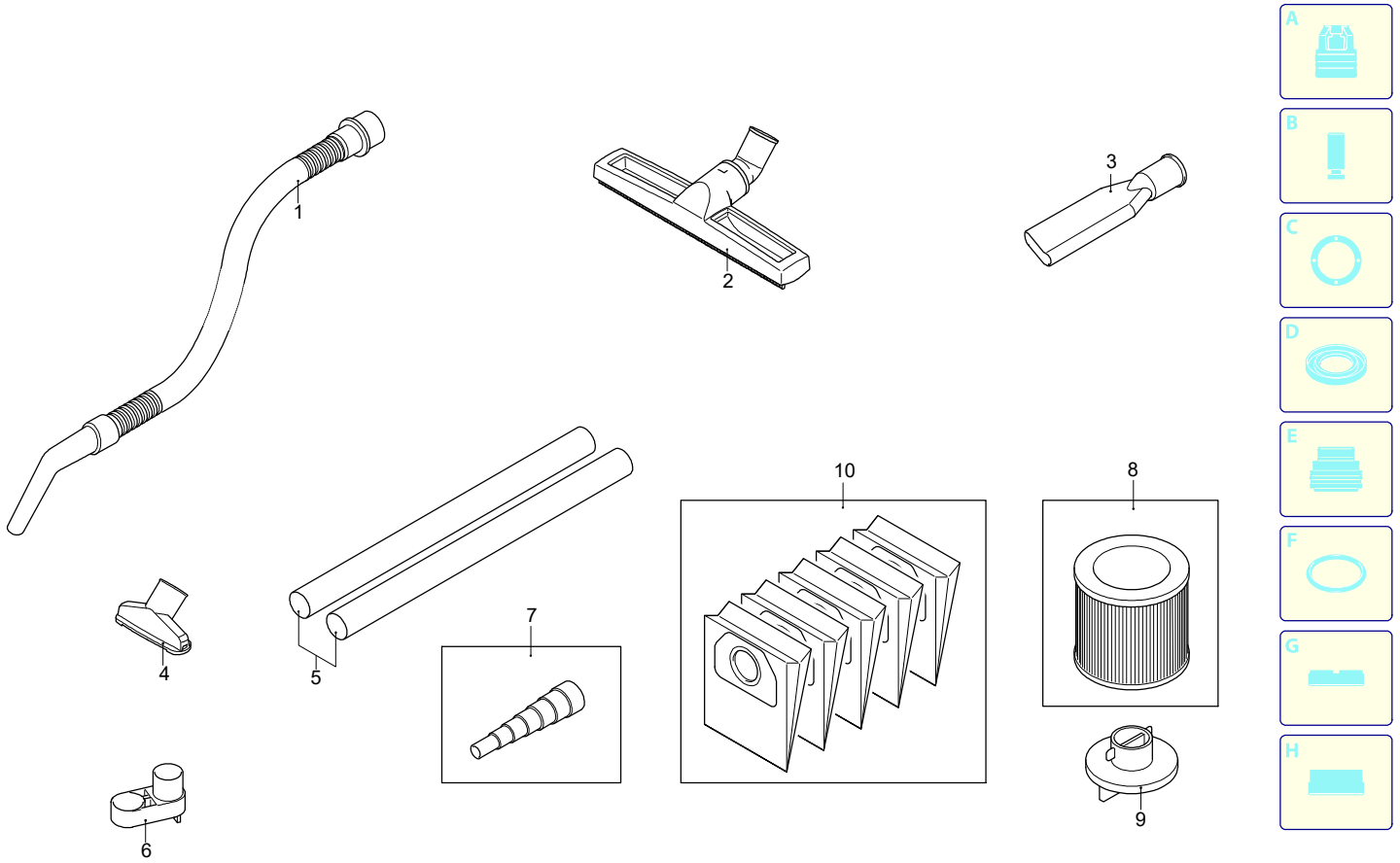

Validity	Pos.	Code	Description	Q
	1	4341310	Pipe	1
	2	4340150	Brush	1
	3	4340730	Lance	1
	4	4340180	Brush	1
	5	4340230	Metal pipe (Q.ty 2)	1
	6	4341400	Accessories carrier	1
	7	46264	Adaptor	1
	8	46263	Cartridge filter (Q.ty 1)	1
	9	4341620	Lock	1
	10	46260	Paper filter (Q.ty 5)	1

UN_CE_2623-GL