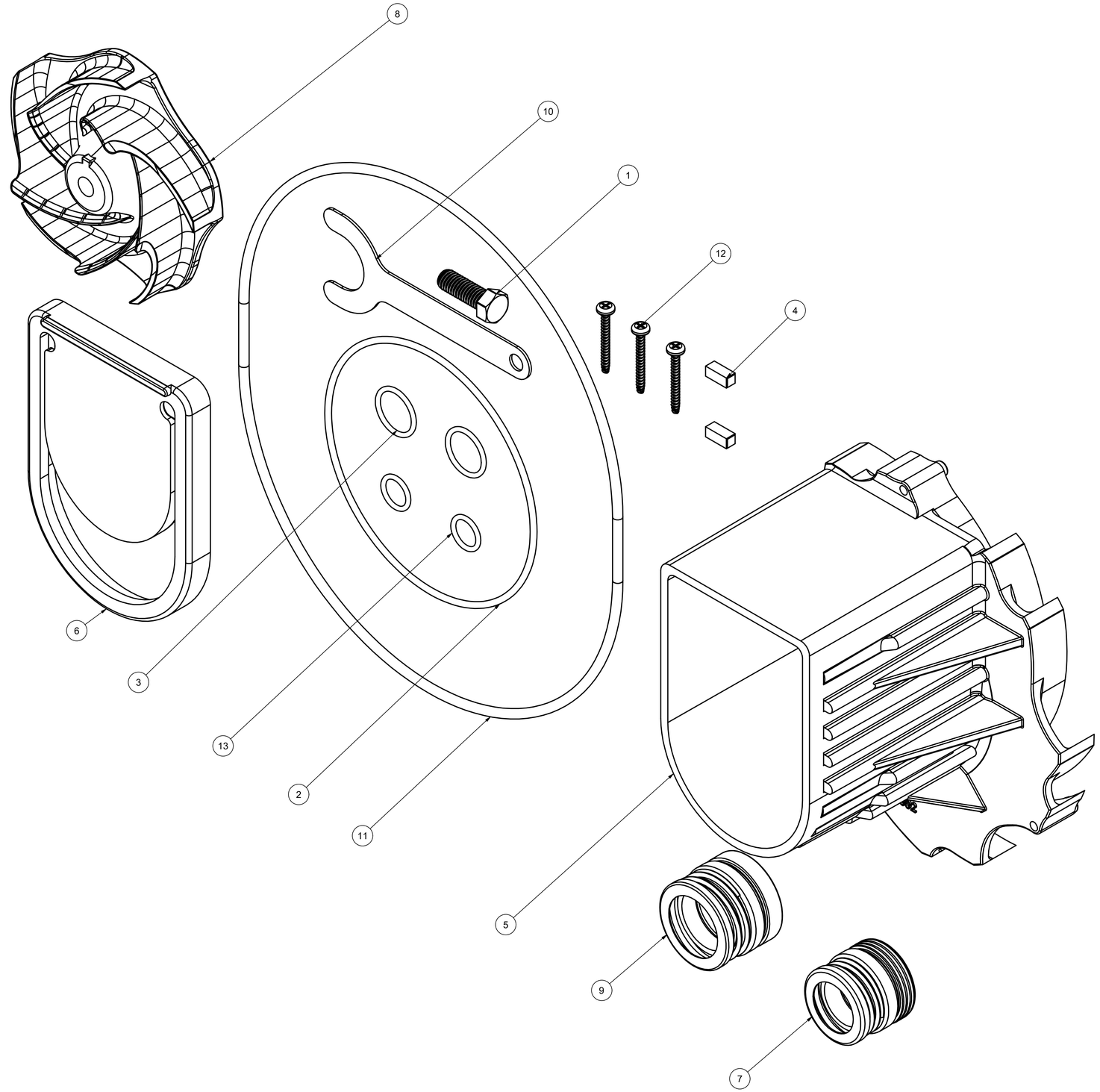

Parts List			
ITEM	QTY	PART NUMBER	DESCRIPTION
1	1	12099	7/16-14 X 1 1/4" HHCS
2	1	13719	AS568A -256 O-RING, EPDM, BLACK
3	2	13778	AS568A -119 O-RING, EPDM, BLACK
4	2	16901SS	1/4" SQ. X 5/8" KEY 18-8 SS
5	1	35002	M350 DIFFUSER
6	1	35005	3" WET SEAL POLY PUMP CHECK VALVE
7	1	35013E	1.125" MECHANICAL SEAL, EPDM, INDIV BOX
8	1	35073	M350 5-VANE IMPELLER
9	1	35213E	1.375" MECHANICAL SEAL, EPDM, INDIV BOX
10	1	35901	350 PUMP SEAL SPACING TOOL
11	1	A380E	AS568 #380 EPDM O-RING
12	3	B1014150TS	#10 X 1 1/2 THREAD FORMING SCREW, 18-8 SS
13	2	UV15163	AS568A -114 O-RING, EPDM, BLACK

BANJO®
Liquid Handling Products

THIS DRAWING AND ALL INFORMATION CONTAINED THEREON ARE THE EXCLUSIVE PROPERTY OF BANJO CORPORATION.

UNLESS SPECIFICALLY NOTED, THIS DRAWING AND ITEMS SHOWN ON THIS DRAWING ARE SUBJECT TO CHANGE AT ANY TIME.

BANJO CORPORATION
A UNIT OF IDEX CORPORATION
150 BANJO DRIVE, CRAWFORDSVILLE, IN 47933
WEB SITE: WWW.BANJOCORP.COM
E-MAIL: BANJOSALES@IDEXCORP.COM

DESCRIPTION:
M350 REPAIR KIT

PART NUMBER:
35000