GENERAL PUMP *A member of the Interpump Group*

HTC Series

HTC1509E175

EMPEROR

EMPEROR

FEATURES

Emperor
Pumps That Rule Any Environment

- Features patent-pending “high tech” packings:
  -dynamic low-pressure seal retainer
  -superior low-pressure seal
  -innovative intermediate ring
  -superior high-pressure seal
- Ceramic plungers
- Patent-pending inlet/outlet valve cage
- Nickel-plated inlet/outlet valve plugs
- Nickel-plated forged brass manifold with exclusive lifetime warranty
- Specifically Designed to handle rigorous duty cycles, high temperatures and chemicals
- Ideal for use in carpet cleaning and other high pressure cleaning applications

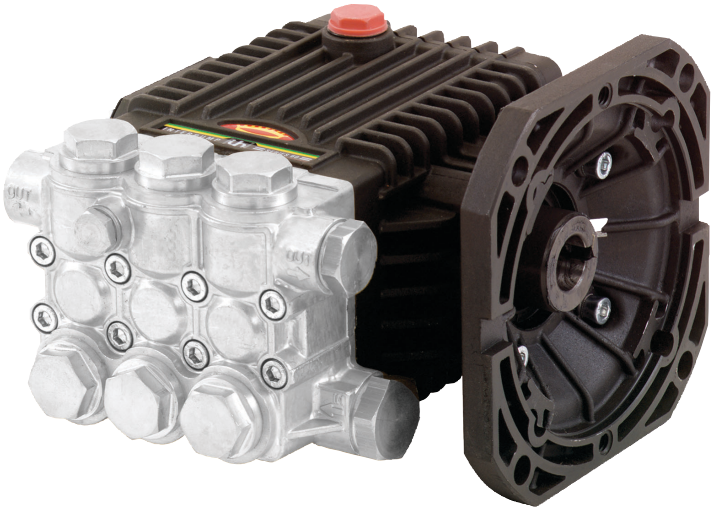

SPECIFICATIONS

Pump Model	**HTC1509E175**
Maximum Volume	2.1 GPM
Maximum Discharge Pressure	2500 PSI
Horsepower	3.6 EBHP
Maximum Pump Speed	1750 RPM
Maximum Inlet Pressure	125 PSI
Minimum Inlet Pressure	3 ft. water (2.6 in. Hg)
Plunger Bore (in / mm)	.591 in. / 15 mm
Plunger Stroke (in / mm)	.370 in. / 9.4 mm
Oil Capacity	11.8 oz.
Maximum Fluid Temperature	185°F
Inlet Port Thread	1/2 -14 BSP-F
Discharge Port Thread	3/8 -19 BSP-F
Shaft Diameter	.626 in. / 16 mm
Weight	15.1 lbs.
Dimensions - Nominal	7.8 x 7.3 x 5.5 in

GENERAL PUMP

Instructions and Recommendations for the Installation of

HTC Series Pumps

The high-temperature pumps of the HT series have been designed for use in applications where the water must be pre-heated, such as in carwash, food and pharmaceutical industries.

Maximum temperature of the water through the pump is 185ºF (85ºC).

In order to obtain maximum performance in terms of duration of seals and valves, it is necessary to respect a few simple rules, as follows:

1) **In order to avoid damage caused by cavitation, the pump must be pressure fed.**

   The higher the inlet pressure, the longer the life of the wet end of the pump.

   When working at 185ºF (85ºC), the minimum feed pressure - measured directly in the inlet port of the pump when it is working - is 45 psi (3 bar).

   The minimum feed pressure accoridng to the different temperatures are:

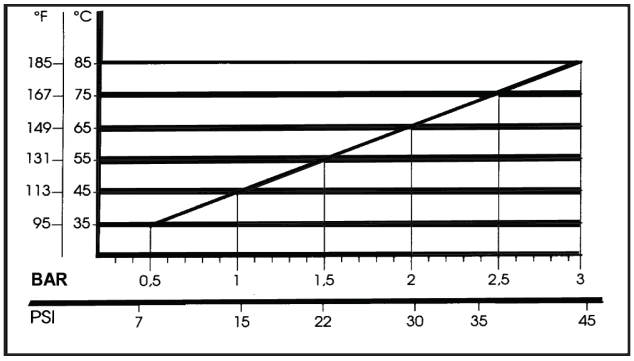

Naturally, if the application allows for feeding the pump with 45 psi (3 bar) even at low temperatures (for example: 115ºF/45ºC the life of the wet end of the pump will be even longer.

2) **The plumbing which feeds the pump must be of a diameter at least equal to the inlet port.** Also, follow the suggestions below:

   a) Make the plumbing as short and straight as possible, preferably in an upward direction to facilitate the expulsion of eventual air bubbles naturally if compatible with the requirements of the system.

   b) It is always useful to put a filter at the inlet with capacity of 4 to 5 times the flow of the pump, for example for a 4 gpm (15 l/min) pump, put a filter from 16 to 20 gpm (60-75 l/mi)The mesh size suitable for this application is 0.016" (.4 mm).

   c) It is extremely important to put a pressure switch on the suction port of the pump, and in any case downstream from the filter, so that it can stop the pump should the feed pressure drop by 20% due to the filter clogging or failure of the feed pump, etc.

3) **Change of oil**

   We recommend the ***first oil change after the first 50 hours***, with the ***pump stopped*** and the ***oil still warm***.

   This change is not recommended because the oil has lost its properties, but rather to eliminate the impurities that have gotten into the oil during the running-in phase. If these impurities are not removed, but are allowed to remain in the oil, they *may cause premature wear* to the moving parts and the oil seals. **After this initial change, the oil can then be changed every three months or 300 hours of operation thereafter.**

   Please note: If the pump works in conditions with high humidity and with sharp temperature changes, it is possible that condensation will appear inside the crankcase, which mixing with the oil can change its properties. This is easy to see because the oil changes to a white, milky color.

   If the pump does not have excessive water leaking from the packings, and the oil becomes milky, the oil has to be changed more frequently. The percentage of water in the oil must not exceed 20%.

   Use oil per the following chart:

CHART OF COMPATIBLE OILS SAE15W40	
GENERAL PUMP	SERIES 100
BP	VISCO 2000
CASTROL	CWX
MOBIL	SUPER
SHELL	HELIX SUPER
TOTAL	QUARTZ 4000-5000

GENERAL PUMP *A member of the Interpump Group*

Emperor
Pumps That Rule Any Environment

HTC Series
HTC1509E175

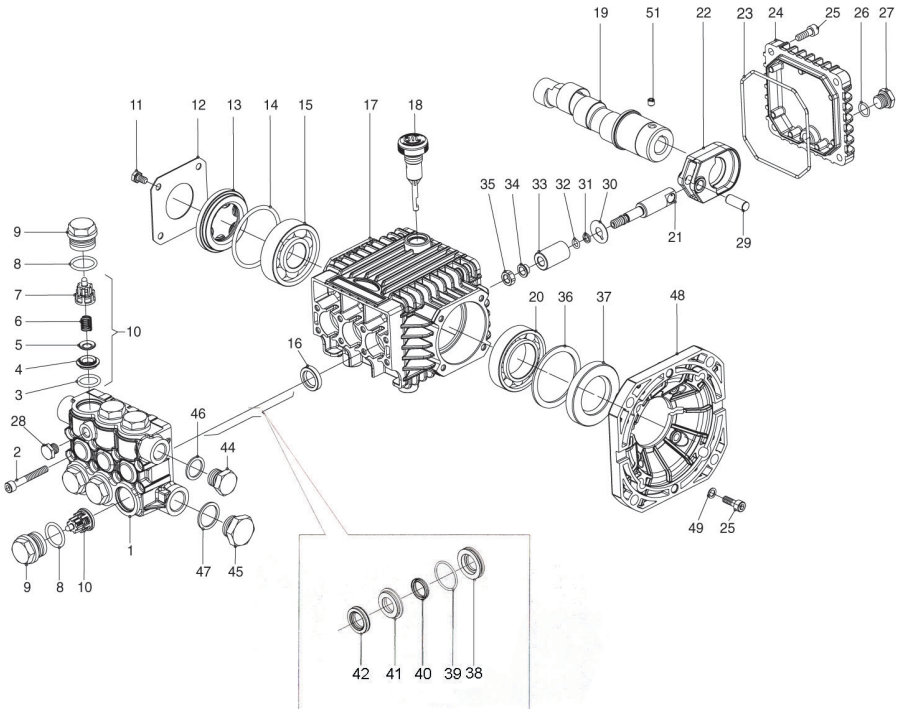

PARTS LIST

ITEM	PART NO.	DESCRIPTION	QTY
1.	60121241	Manifold, 15mm	1
2.	99195000	Screw, M6 x 45	8
3.	90384100	O-ring	6
4.	36200366	Valve Seat	6
5.	36200176	Valve	6
6.	94737600	Spring	6
7.	36202551	Valve Cage	6
8.	90384700	O-ring	6
9.	98221300	Valve Plug, Nickel-plated	6
10.	36711501	Valve Assembly	6
11.	99180700	Screw, M6 x 10	4
12.	50150074	Bearing Cover	1
13.	44211801	Oil Level Indicator	1
14.	90409700	O-ring	1
15.	91833100	Ball Bearing	1
16.	90156500	Oil Seal	3
17.	60010022	Crankcase	1
18.	98210300	Oil Dip Stick	1

ITEM	PART NO.	DESCRIPTION	QTY
19.	60022465	Crankshaft, 5mm	1
20.	91846500	Ball Bearing	1
21.	60050066	Plunger Guide	3
22.	60030022	Connecting Rod	3
23.	90391800	O-ring, Cover	1
24.	60160022	Rear Crankcase Cover	1
25.	99186700	Screw, M6 x 18	8
26.	90358500	O-ring	1
27.	98204100	Plug, 1/4" G	1
28.	98196700	Plug, Nickel-plated Brass, G	1
29.	97733300	Wrist Pin	3
30.	96707000	Washer	3
31.	90502200	Anti-ext. Ring	3
32.	90357300	O-ring	3
33.	60040009	Ceramic Plunger, 15mm	3
34.	44211570	Bushing	3
35.	92221600	Nut, M8	3
36.	60210189	Spacer	1

ITEM	PART NO.	DESCRIPTION	QTY
37.	90167500	Oil Seal	1
38.	60080270	L.P Seal Retainer, 15mm	3
39.	90360400	O-ring	3
40.	90215000	L.P. Seal. 15mm	3
41.	60216270	Int. Ring, Brass, 15mm	3
42.	90216200	H.P. Seal, 15mm	3
44.	98209900	Plug, Brass, G, 3/8x13	1
45.	98217900	Plug, Brass, G, 1/2x10	1
46.	96738000	Gasket, Alum. 3/8G	1
47.	96751400	Gasket, Alum., 1/2"G	1
48.	10034422	Flange	1
49	96693800	Washer	1
51.	99179000	Screw, M6	1

REPAIR KITS

KIT NO.	K83	K123	K243	K244
ITEM NO'S INCLUDED IN KIT	16	3, 4, 5, 6, 7 (10)	39, 40, 42	38, 39, 40, 41, 42
NUMBER OF ASSY'S IN KIT	3	6	6	1
NO. OF CYLINDERS KIT SERVICES	3	3	3	1

TORQUE SPECS*

Position	Ft.-Lbs.	Nm.
2	8.8	12
9	59.0	80
11	7.4	10
25	7.4	10
27	14.7	20
28	9.6	13
35	11.1	15
44	29.5	40
45	29.5	40

*Decrease torque by 20% if threads are lubricated.
**Use Loctite 542

DIMENSIONS

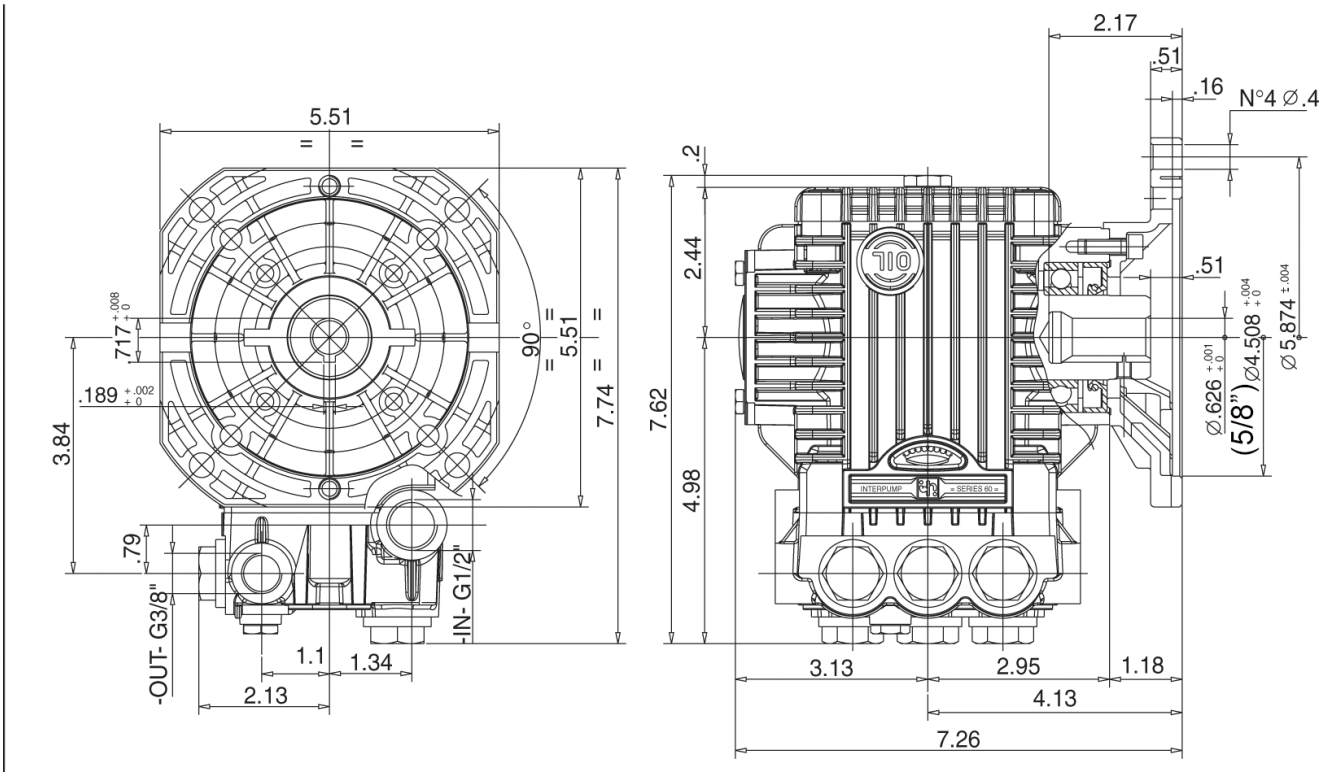

GENERAL PUMP **1174 Northland Drive Mendota Heights, MN 55120**
Phone: (651)686-2199 FAX: (651)686-2197 e-mail: sales@gpcompanies.com www.generalpump.com

GENERAL PUMP