UDOR WATER POWER

Serie / *Series*

C

298200

PUMP CD 18.5/22 S

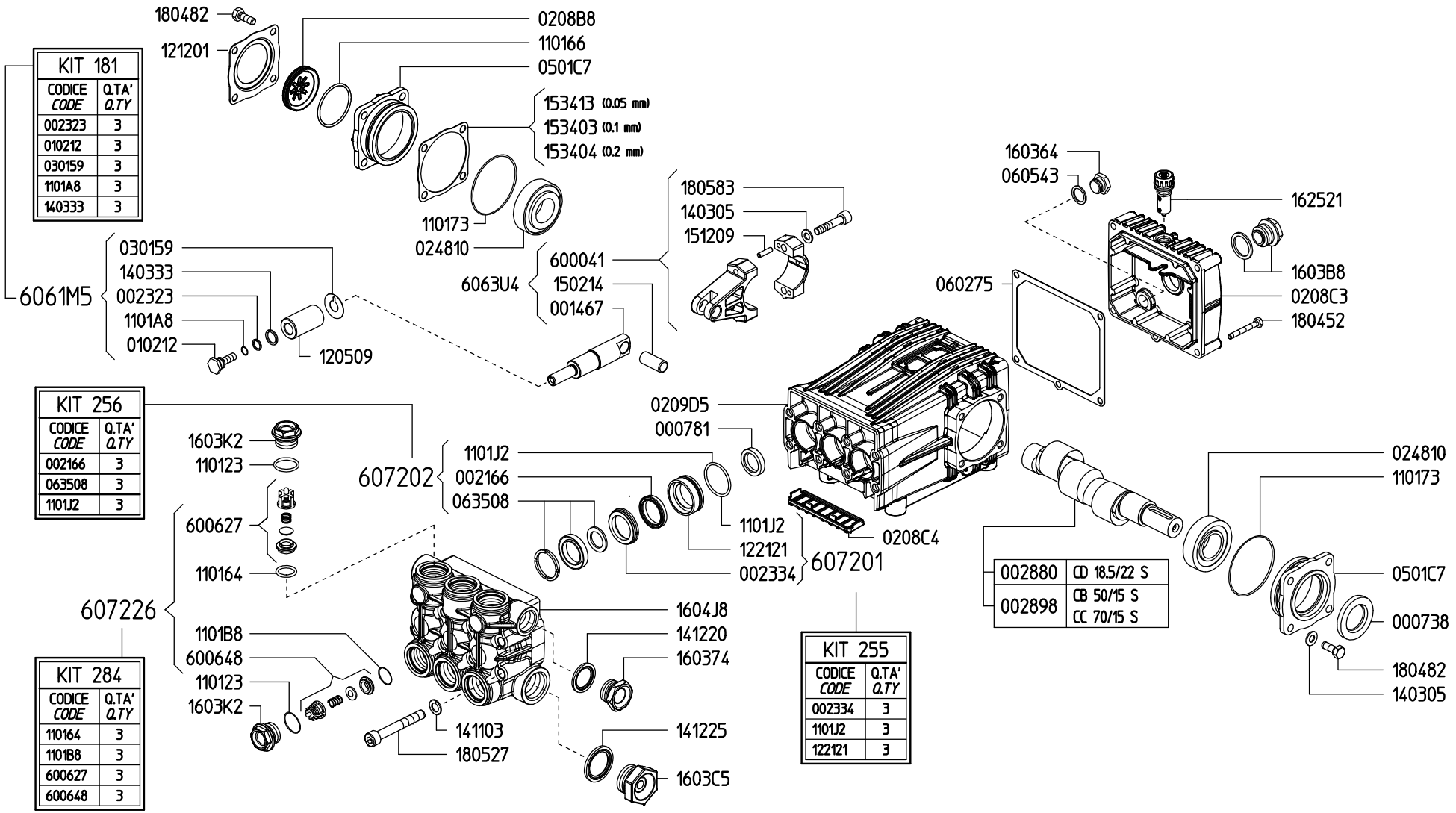

Rev.25-01