UDOR WATER POWER

Serie / *Series*

CK

295800

PUMP CKD 12.0/30 S

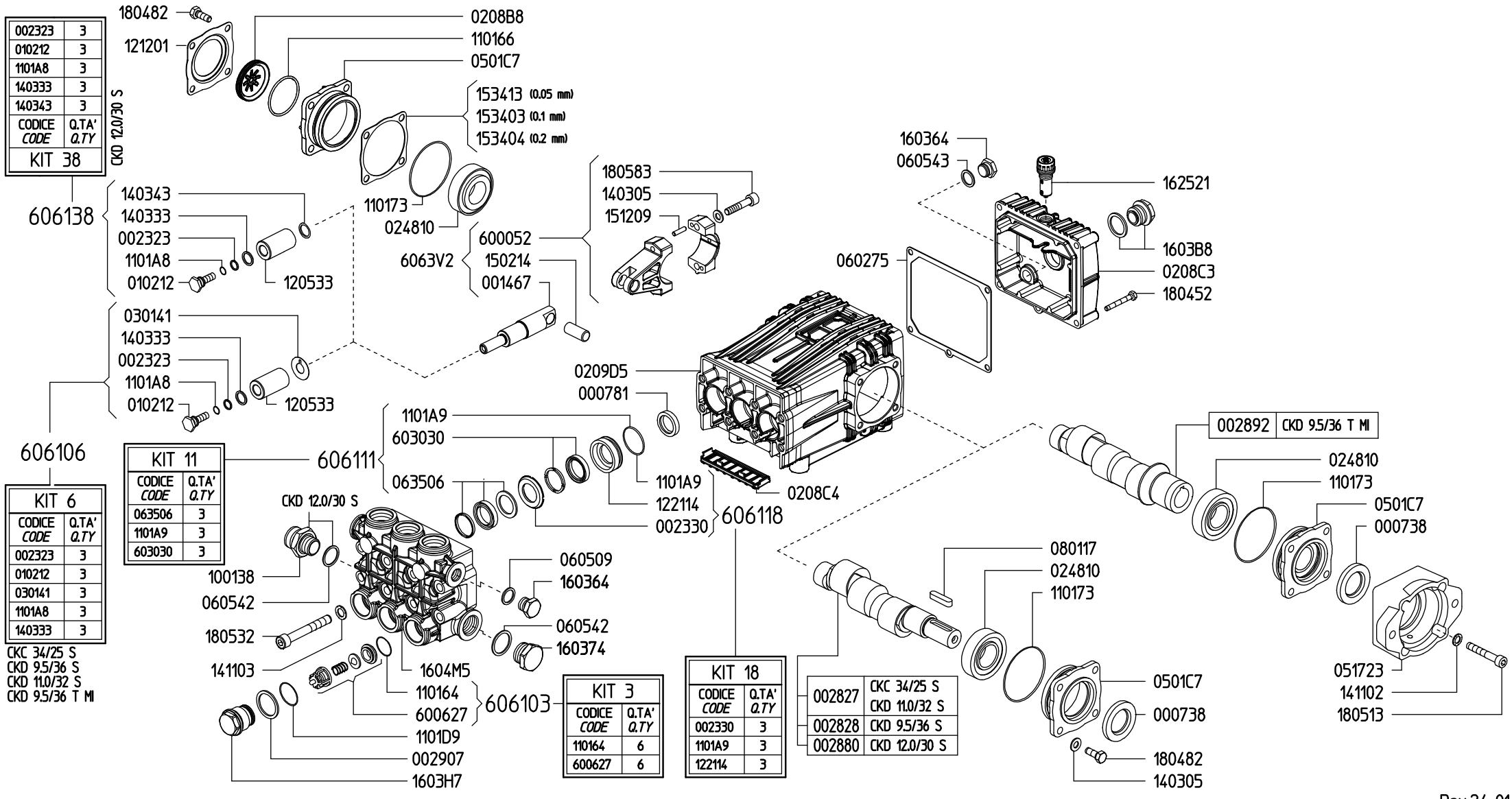

Rev.24-01