UDOR WATER POWER

Serie / *Series*

# CK

## *295700*

## *PUMP CKD 11.0/32 S*

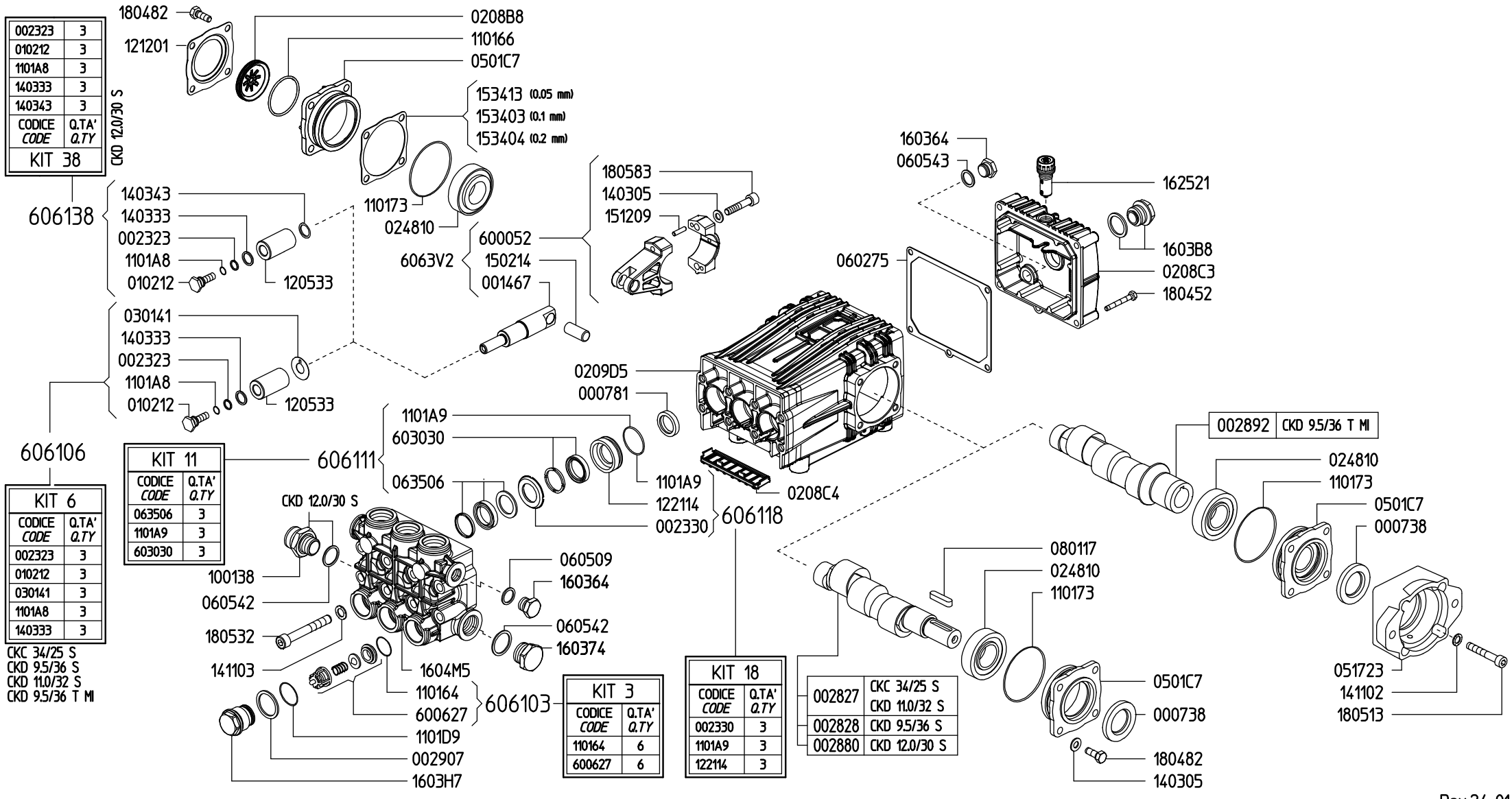


Rev.24-01