UDOR WATER POWER

Serie / *Series*

CK

295600

PUMP CKD 9.5/36 S

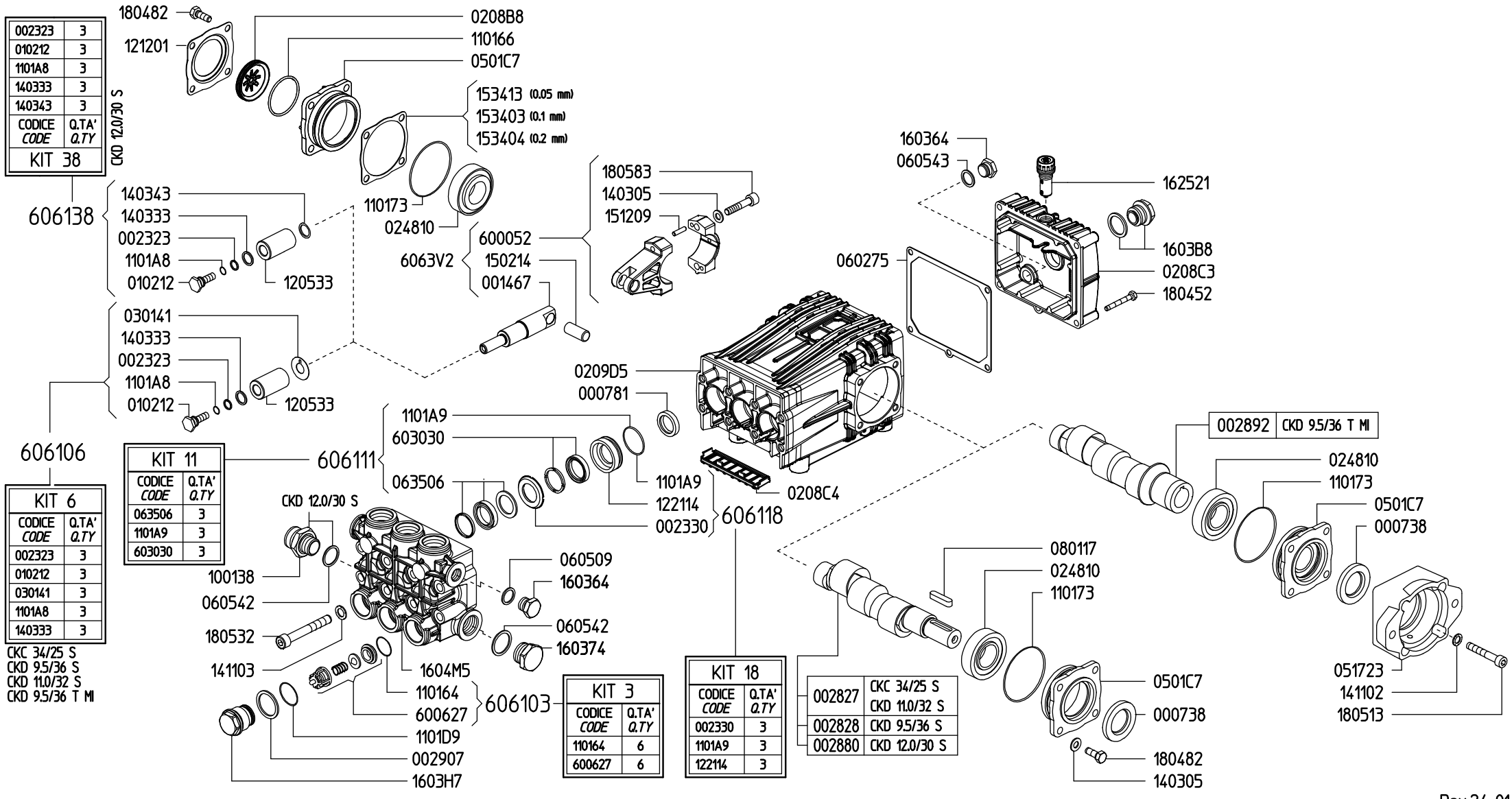

Rev.24-01