UDOR WATER POWER

Serie / *Series*

CK

292600

PUMP CKC 34/25 S

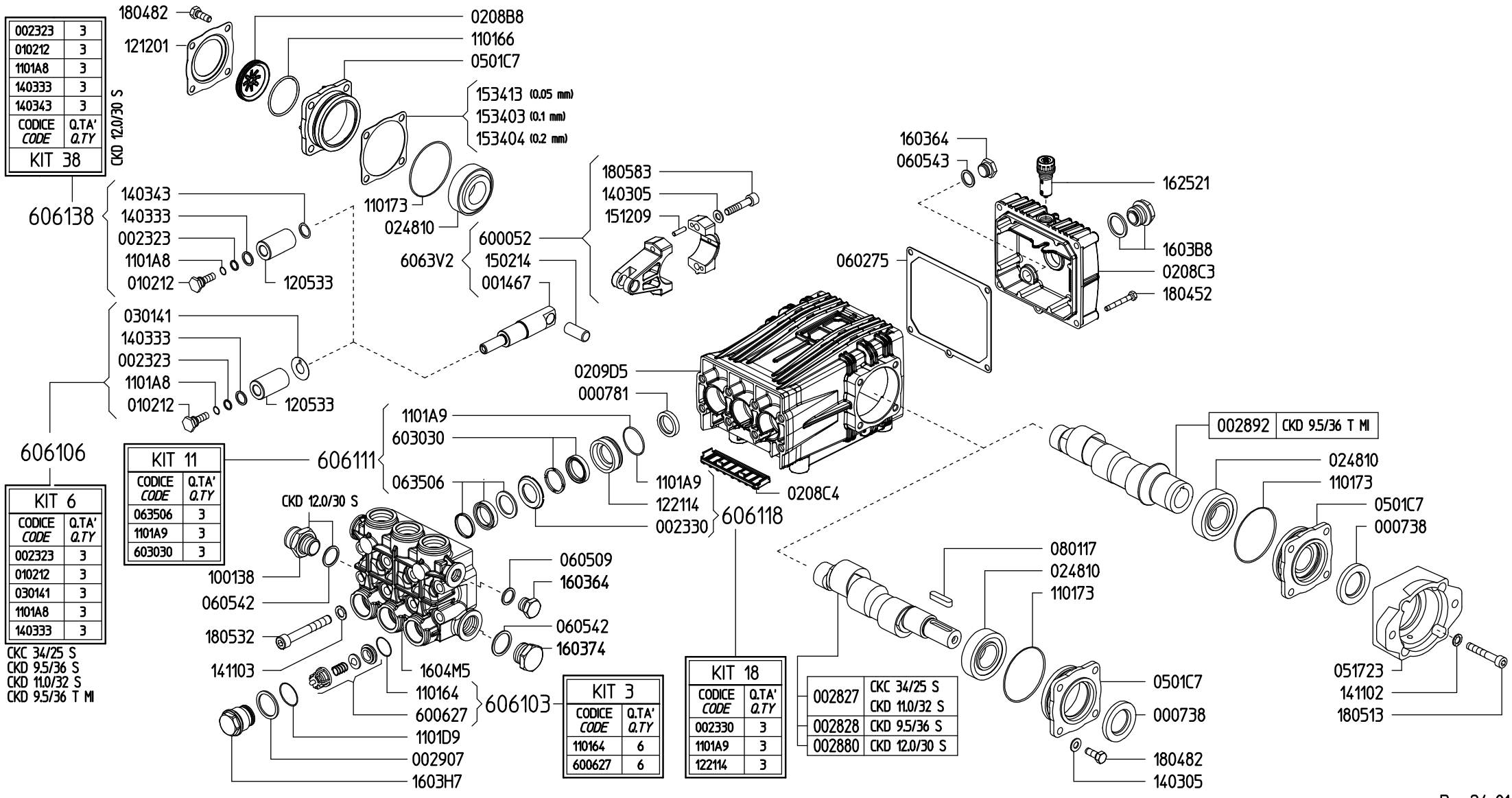

Rev.24-01