SAFETY PRECAUTIONS

1. Make sure incoming pressure does not exceed the rated pressure.
2. Use proper eye protection when assembling and using the hose reel.
3. Assemble the hose reel on a clean workbench free of debris and moisture.
4. Use soap and water when checking for air leaks.
5. Keep children away from work area.

WARNING!

Exposure of skin directly to pressurized air or fluids could result in severe bodily injury!

Ref 300983 Rev. A
04-16

General Pump
1174 Northland Drive • Mendota Heights, MN 55120
Phone: 651.686.2199 • Fax: 800.535.1745
www.generalpump.com • email: sales@gpcompanies.com



INDUSTRIAL HOSE REELS

From General Pump

- **Direct hand-crank rewind with locking mechanism**
- **Solid steel construction**
- **Durable powdercoat finish**
- **Full flow swivel**

2100443 - BLUE

2100469 - BLACK

Operator's Manual

Ref 300983 Rev. A
04-16

General Pump
is a member of
The Interpump Group

GENERAL PUMP

ASSEMBLY AND OPERATING INSTRUCTIONS

1. Connect the handle to the flange. Nuts go on handle side of flange.
2. Use (4) 3/8” or 10 mm bolts when securing the hose reel to ceiling or wall.
3. Use thread sealant (not provided) on inlet threads and on outlet hose (not provided).
4. Attach pigtail end to high pressure pump outlet.
5. Attach hose reel hose to swivel on hose reel
6. The hose reel is ready for operation.

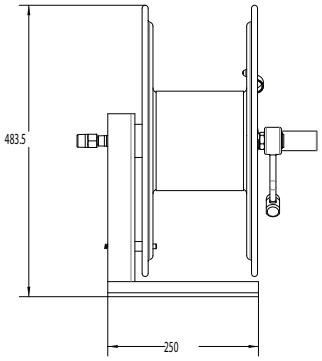

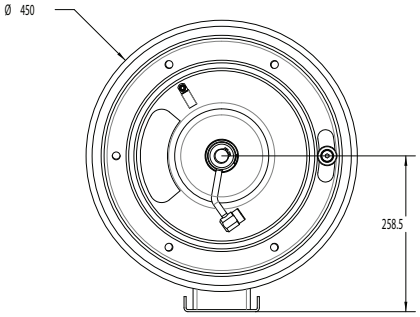

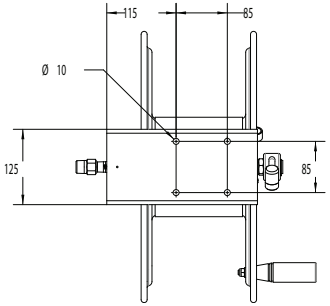

Ref 300983 Rev. A
04-16

SPECIFICATIONS

Model	3/8” Capacity	Swivel Pressure Rating	Inlet	Outlet
2100443	150 Ft.	5000 PSI	3/8” NPT-M	3/8” NPT-F

MAXIMUM TEMPERATURE RATING: 185^{0}F

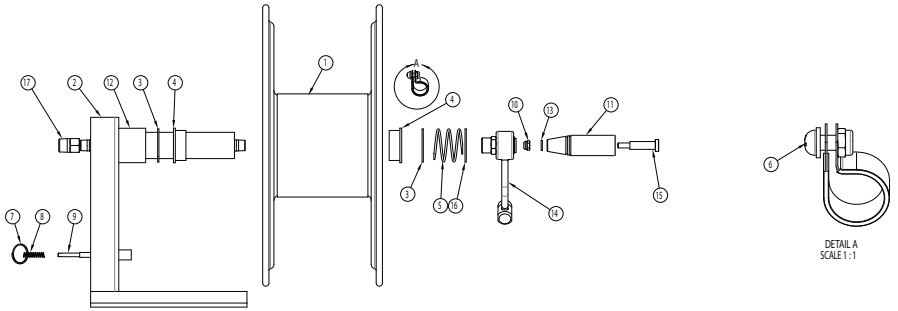

PARTS LIST

ITEM	PART #	DESCRIPTION	QTY
1	2103273	ASSY, SUB, HUB, BLUE	1
	2103296	ASSY, SUB, HUB, BLACK	
2	2540099	BASE, HOSE REEL, BLUE	1
	2540108	BASE, HOSE REEL, BLACK	
3	2203415	WASHER	2
4	2530025	BUSHING	2
5	2720010	SPRING	1
6	2103237	ASSY, CLAMP, HOSE	1
7	2200032	RING	1
8	2720004	SPRING	1
9	2530102	PIN, LOCK	1
10	2200053	NUT, M8X1.25	1
11	2660233	HANDLE	1
12	2660231	BUSHING	1
13	2200013	WASHER, M8	2
14	2103261	SWIVEL, HOSE REEL	1
15	2200100	HHCS, M8 X 1.25	1
16	2203416	WASHER, SWIVEL	1
17	2530112	FITTING, 1/2NPT-MX3/8NPT-F	1

Ref 300983 Rev. A
04-15