Model 2.0 PE

Version:

Serial number:

Code: **14986**

02/01/2020

220-240 V - 50/60 Hz | **schuko**

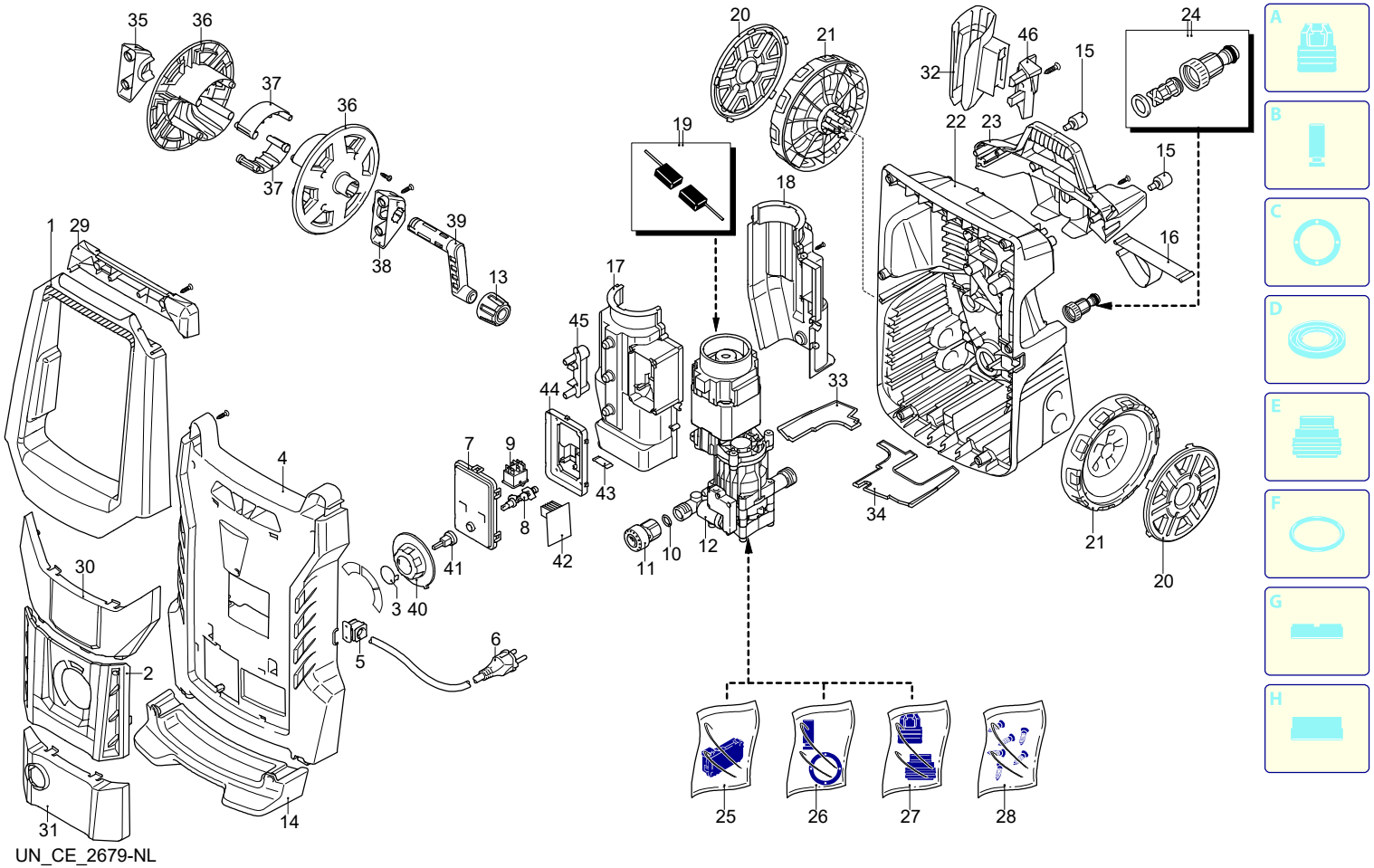

UN_CE_2679-NL

Validity	Pos.	Code	Description	Q
	1	4380640	Handle	1
	2	4383320	Guard	1
	3	4580800	Plug	1
	4	4380650	Casing	1
	5	3080580	Cable gland	1
	6	3082360	Cable	1
	7	4720490	Cover	1
	8	4720470	Pin	1
	9	4720610	Switch	1
	10	3083380	O-ring	1
	11	4383520	Fitting	1
	12	4720680	Electric pump assembly	1
	13	4380452	Knob	1
	14	4380680	Foot	1
	15	2180330	Rubber foot	1
	16	4383420	Accessories carrier	1
	17	4380160	Conveyor	1
	18	4380170	Conveyor	1
	19	3082600	Brush kit for motor	1
	20	4380631	Guard	2
	21	4380610	Wheel	2
	22	4380960	Base	1
	23	4380990	Accessories carrier	1
	24	3082130	Water coupling kit	1
	25	3081280	TSS kit	1
	26	3081270	Piston + seals kit	1
	27	3081290	Valves + seals kit	1
	28	4381470	Screw kit	1
	29	4380691	Knob	1
	30	4383330	Guard	1
	31	4383410	Guard	1
	32	4580590	Accessories carrier	1
	33	4380590	Guard	1
	34	4380580	Guard	1
	35	4380470	Bracket	1
	36	3080200	Plate	2
	37	4380550	Shim	2
	38	4380460	Bracket	1
	39	4380560	Lever	1
	40	4580670	Knob	1
	41	4383370	Extension	1
	42	4720620	Board	1
	43	4720500	Spring	1
	44	4720480	Support	1
	45	4720250	Lock	1
	46	4383400	Support	1

Model 2.0 PE

Version:

Serial number:

Code: **14986**

02/01/2020

220-240 V - 50/60 Hz | schuko

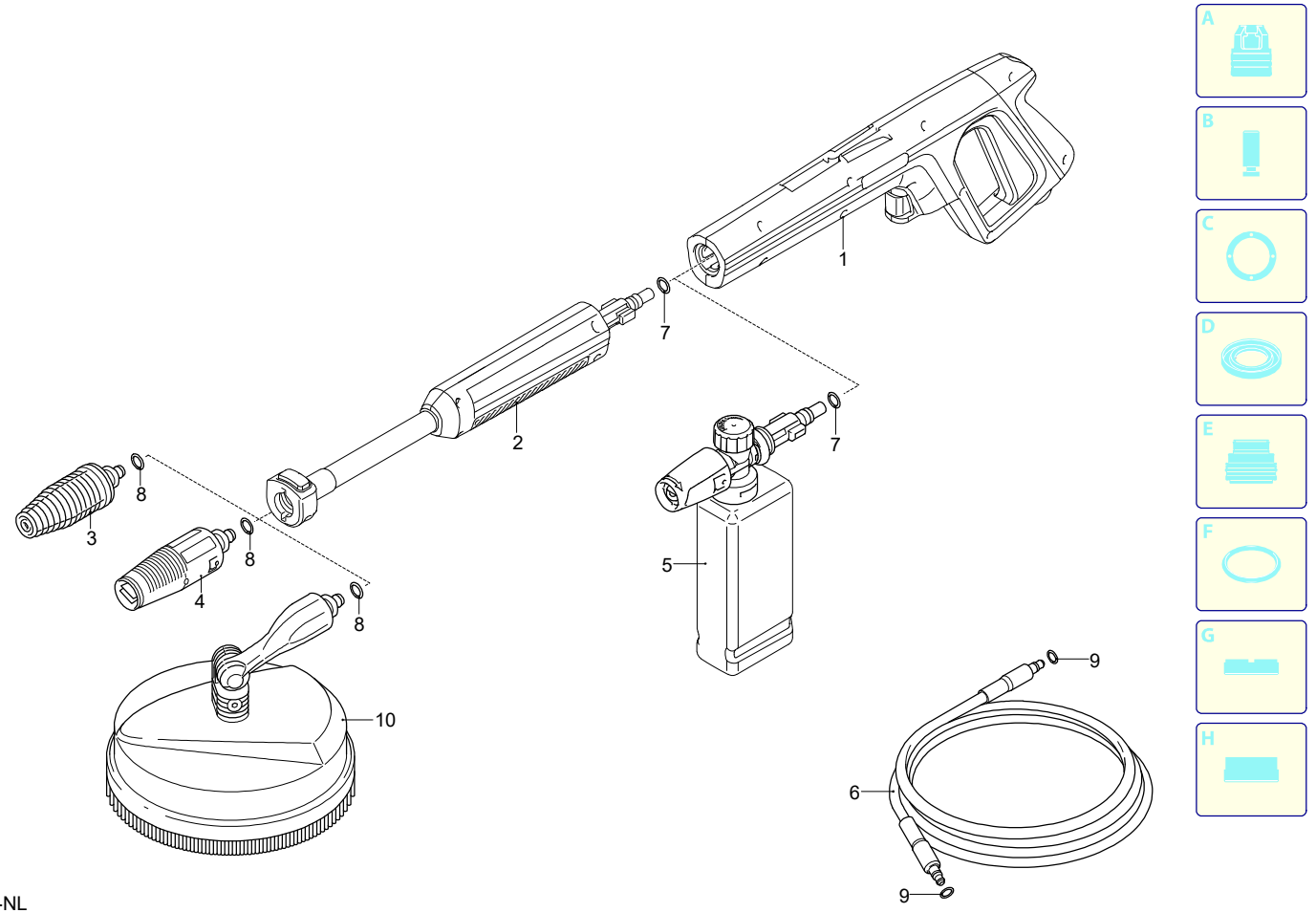

Validity	Pos.	Code	Description	Q
	1	4381482	Gun	1
	2	4381492	Extension	1
	3	4100800	Lance head	1
	4	4101550	Lance head	1
	5	4383501	Tank	1
	6	4821170	High pressure hose	1
	7	3083700	O-ring	3
	8	3083370	O-ring	2
	9	3083400	O-ring	2
	10	3084354	Mini Patio	1