SUTTNER AMERICA COMPANY

Spare Parts

ST - 2620 Spray Gun

Item-No. 202620510

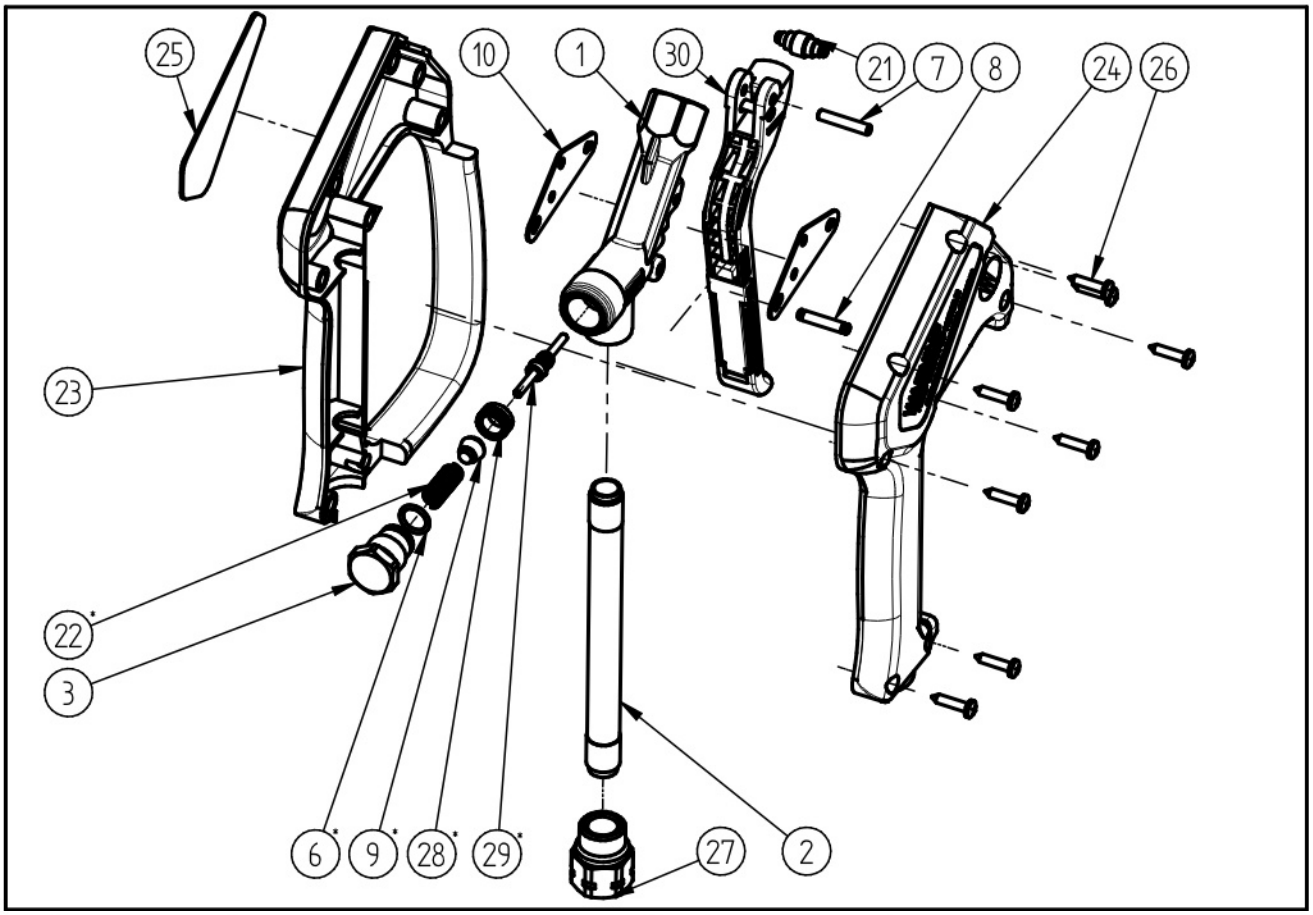

Pos.	Item-No.	Description
1	010007354	Housing ST-2620 1/4"NPT
2	070001397	Pipe inlet stainless steel
3	010007345	Screw plug ST-2620
6	050001521	O-ring 10x1,5 EPDM 80 Shore
7	040007081	Axle for trigger 4x22 honed
8	040007060	Pin ST-2600
9	020000450	Valve cone ST-2710
10	040007059	Support plate ST-2600
21	040007062	Pressure coil
22	060002055	Spring D1,2x24mm ST-1500 350b.
23	020008641	Plastic housing w. h. ST-2600 red
24	020008646	Plastic housing ST-2600 red
25	020009155	Label ST-2620 black
26	040000051	Screw 3.5x16
27	010002610	Inlet - nut 3/8" NPT female
28	202710480	Valve seat complete
29	202300380	Piston rod complete

Pos.	Item-No.	Description
30	202600410	Trigger complete ST-2600 black