SUTTNER AMERICA COMPANY

Spare Parts

Spray Gun ST - 2305

Item-No. 202305600

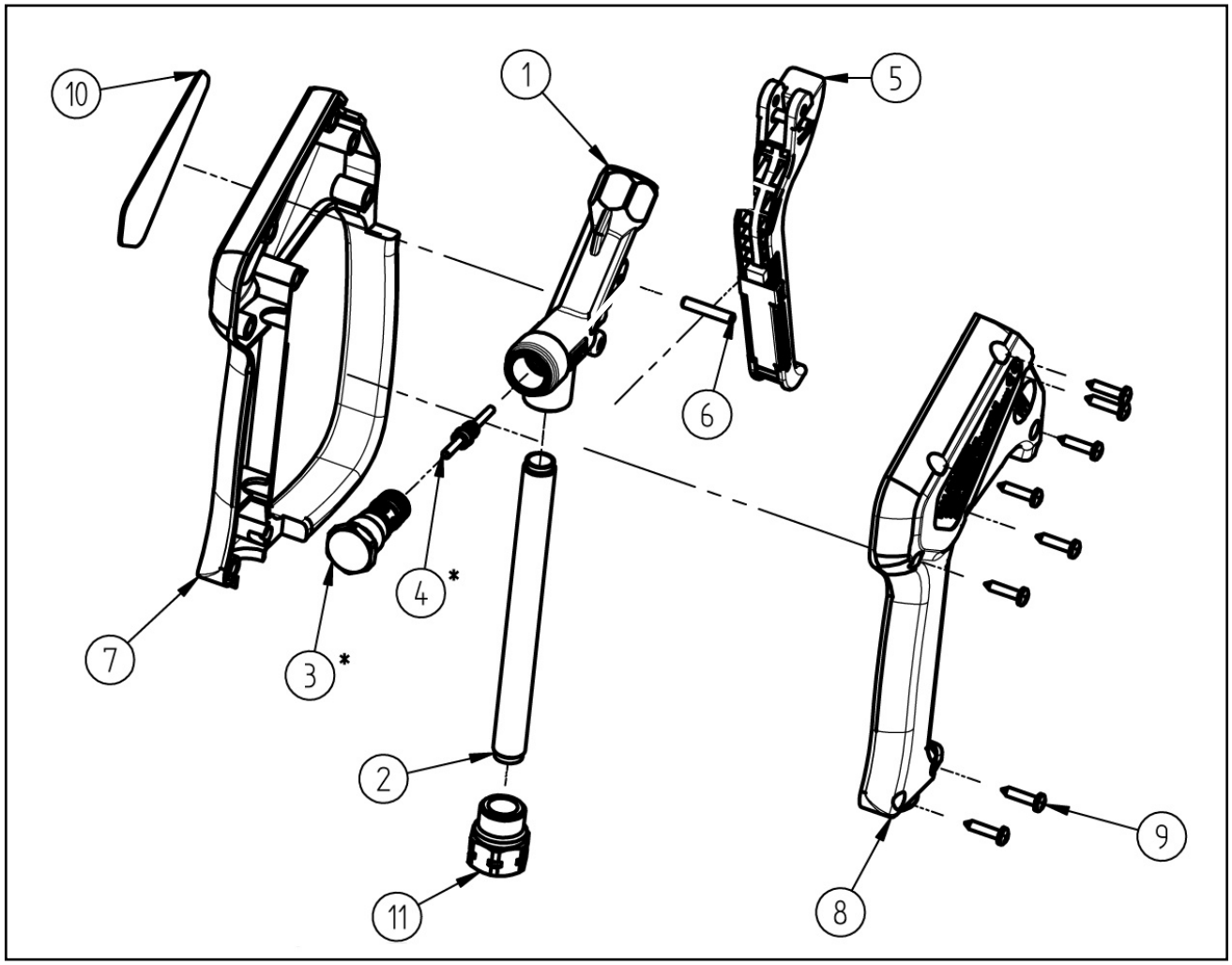

Pos.	Item-No.	Description
1	01 0007 343	Housing ST-2300/2600 1/4" NPT
2	07 0001 397	Pipe inlet
3	20 2300 455	Valve TM ST-2300/2600
4	20 2300 380	Piston rod complete
5	20 2300 411	Trigger complete
6	04 0007 081	Axle for trigger
7	02 0008 615	Plastic housing with handle
8	02 0008 620	Plastic housing
9	04 0000 051	Screw 3.5x16
10	02 0008 830	Label grey
11	04 0001 024	Inlet nut 3/8 NPT female