Spare Parts

Spray Gun ST - 2000 (5000 PSI)

Item-No. 20200920

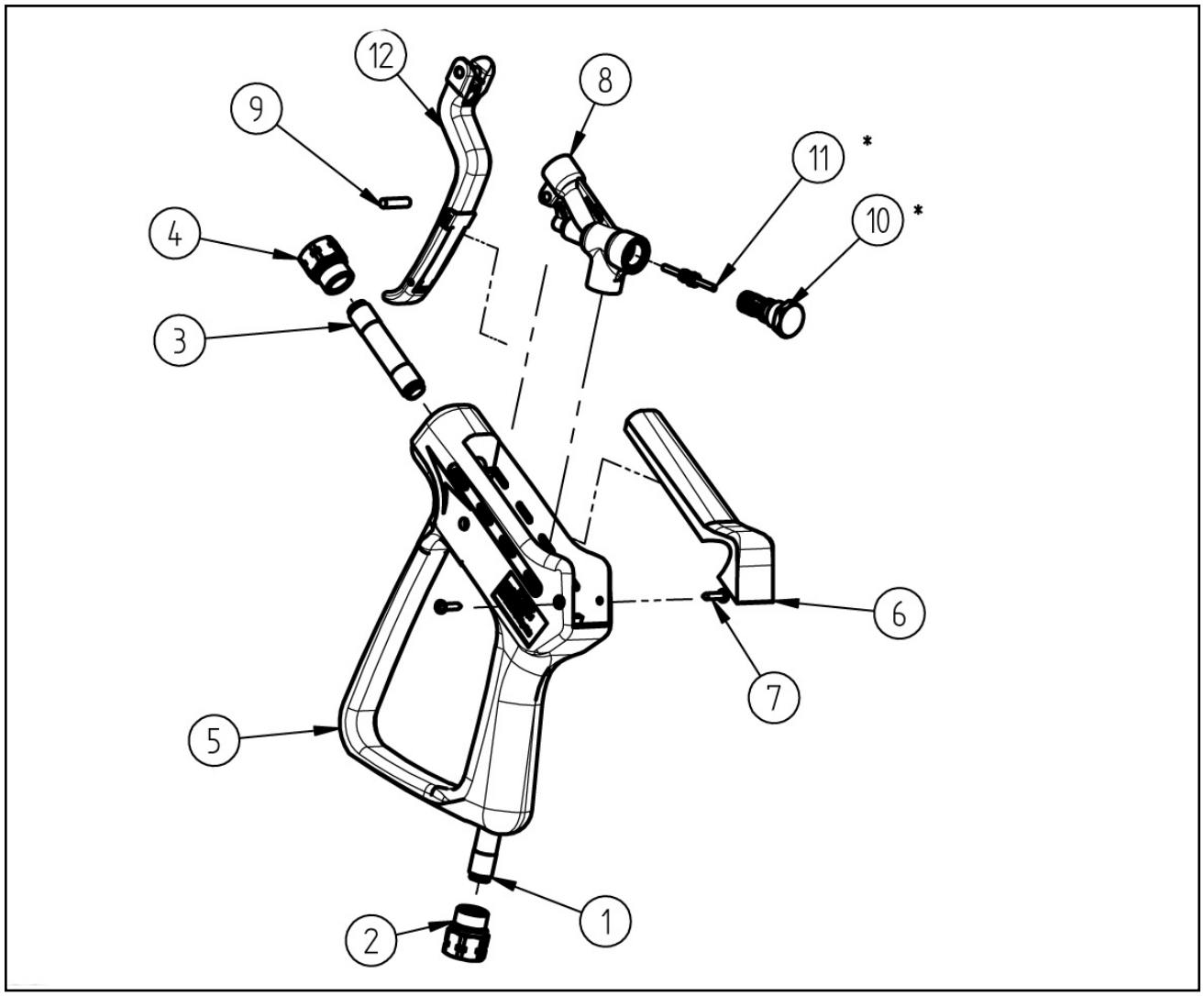

Pos.	Item-No.	Description
1	06 0000 270	Inlet Pipe zinc plated
2	10 0000 400	Inlet nut
3	06 0000 260	Ausgangsrohr 12,6x1,8x63 ST-2000
4	10 0000 490	Outlet nut 1/4NPT fm
5	02 0001 166	Plastic housing with handle
6	02 0001 150	Plastic cover
7	04 0000 050	Screw zinc plated
8	01 0001 310	Valve housing
9	04 0000 031	Pin
10	20 1500 455	Valve screw assembley
11	20 2300 380	Piston rod complete
12	20 2000 025	Trigger complete