SUTTNER AMERICA COMPANY

Spare Parts

Spray Gun ST - 1200 Wash Down (stainless steel)

Item-No. 201200520

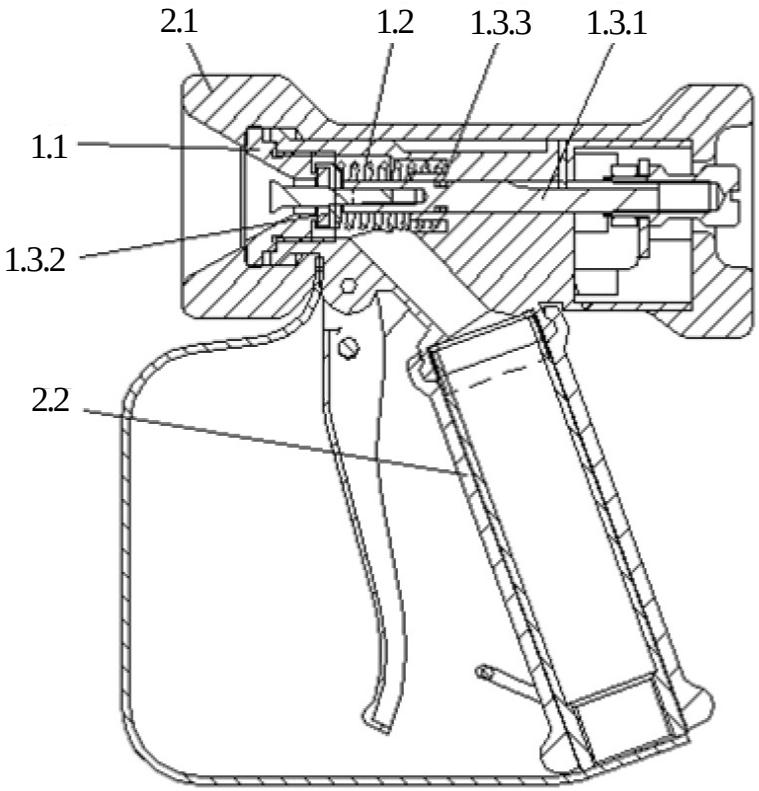

Pos.	Item No.	Description
1	201200420	Repair Kit "1"- complete
1.1		Nozzle
1.2		Spring
1.3		Piston Rod - complete
1.3.1		Piston Rod
1.3.2		Valve - complete
1.3.3		O-ring

Pos.	Item No.	Description
2	201200495	Repair Kit "2"- complete
2.1		Protection for valve housing
2.2		Protection for valve handle