GENERAL PUMP *A member of the Interpump Group*

190043

Trapped Pressure Control Set Unloader

Models ZKW21, ZKW21L, ZKW22L

TRAPPED PRESSURE CONTROL SET UNLOADER

with Chemical Injector

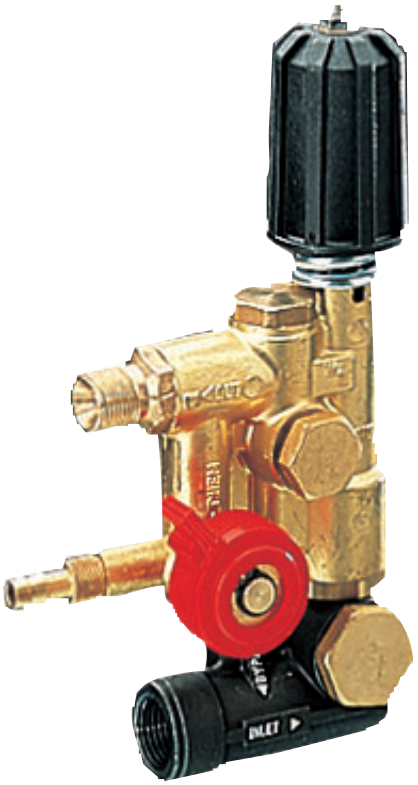

General Pump recommends using a safety relief device in conjunction with this unloader valve when installed on a positive displacement pump. General Pump is not liable and assumes no responsibility for this valve when used in a customer's high pressure system.

FEATURES

- Reduces Cost - Eliminates the need for fittings and bypass hose.
- Compact Design - Features forged brass body and hardware.
- Versatile - Mounts in seconds to either side of pump manifold.
- Adjustable Unloader Valve - Trapped pressure type with internal bypass system.
- Built-In Chemical Injector - Includes variable metering adjustment.

SPECIFICATIONS

Flow Range:	ZKW21, ZKW21L ZKW22L	2.9 - 4.5 GPM 4.5 - 6.0 GPM
Maximum Pressure		3000 PSI
Maximum Temperature		200° F
Port Sizes:	Inlet Outlet	1/2-14 BSPP-F 3/8-19 BSPP-M
Chemical Inlet		5/16 in. I.D. Hose
Weight		2 lbs.
Dimensions		8.5" x 2.0" x 5.0"

Model ZKW21, ZKW21L	**2.9 - 4.5 GPM**
Model ZKW21 used on pump models:	TS1371, TT1411, TT1611, TT9351, TT9441, TT9971, All EZ Pumps
Model ZKW21L used on pump models:	T811, TS1011, TS1311, TS1331, TS1511, TS1711, TS2011, T9131, T9211

Model ZKW22L	**4.5 - 6.0 GPM**
Model ZKW22L used on pump models:	T821, T921, T1021, T1321, T1621, T9121, T9161, TS821, TS921, TS1321, TS1521, TS1621, TS2021

GENERAL PUMP

190043

GENERAL PUMP *A member of the Interpump Group*

Trapped Pressure Control Set Unloader

PARTS LIST

ZKW2 Pressure Control Set

No.	Part No.	Description	Repair Kit	Qty.
1.	92202000	Nut, M6		1
2.	99186700	Screw, M6 x 16		1
3.	36314502	Knob		1
4.	530007	Guide, Spring		1
5.	94751600	Spring	93	1
6.	92220000	Nut, M8		1
7.	36313401	Body		1
8.	93185800	Washer, M17.5		1
9.	90503400	Ring, Back-up	93	1
10.	90357700	O-ring, .302 x .070	93	2
11.	96700900	Washer, M8		2
12.	36314373	Guide, Piston		1
13.	97666000	Pin		1
14.	94738400	Spring	93	1
15.	90357400	O-ring, .239 x .070	93	5
16.	36314266	Piston, Control		1
17.	90382200	O-ring, .391 x .103	93, 94	3
18.	90506500	Ring, Back-up, M10.6x15	93	1
19.	36313766	Seat, Valve	93	1
20.	90359300	O-ring, .614 x .070	93	1
21.	97483800	Ball, 13/32"	93	2
22.	90384300	O-ring, .703 x .103	93	1
23.	36313670	Screw, M22 x 1.5		1
24.	93197200	Washer, M21.5		1
25.	36313522	Body, Banjo		1
26.	90384100	O-ring, .674 x .103	93	1
28.	510037	Fitting, Banjo		1
29.	36313893	Bypass Tube; W21		1
	36316293	ByPass Tube: W21L, W22L		1
30.	90383200	O-ring, .549 x .103	94	1
31.	10007870	Nipple		1
32.	10007666	Nozzle: Ø .087", W21, W21L		1
	10007766	Nozzle: Ø .098, W22L		1
33.	36314070	Screw, 3/8"		1
34.	90382700	O-ring, .469 x .103	93	1
35.	94735500	Spring	93	1
36.	36310451	Guide, Valve	93	1
37.	90383900	O-ring, .625 x .103	93	1
38.	98215200	Cap, M20		1
39.	90358500	O-ring, .426 x .070	94	1
40.	36256370	Seat, Valve		1
41.	90357000	O-ring, .176 x .070	94	2
42.	36256670	Fitting, Hose Barb		1
43.	36314641	Body, Injector		1
44.	94738300	Spring	94	1
45.	90358000	O-ring, .344 x .070	94	1
46.	36314770	Shutter		1
47.	36314870	Insert, Knob		1
48.	36314951	Knob, Regulation		1
49.	90054500	Circlip		1
50.	96729000	Washer, M14		1
51.	90357200	O-ring, .208 x .070	94	1
52.	97478200	Ball, 7/32"	94	1
53.	94821700	Spring, Taper	94	1
54.	90358200	O-ring, .364 x .070	94	1

Repair Kit 93	
Includes No.'s:	5, 10, 11, 15, 16, 18, 19, 20, 21, 22 23, 24, 28, 29, 36, 37, 38, 39

Repair Kit 94	
Includes No.'s:	18, 32, 41, 43, 46, 47, 53, 54, 55, 56

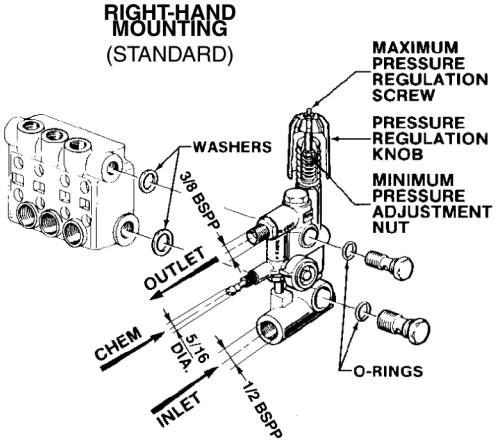

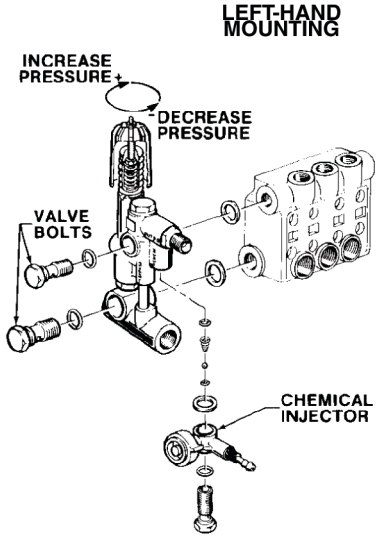

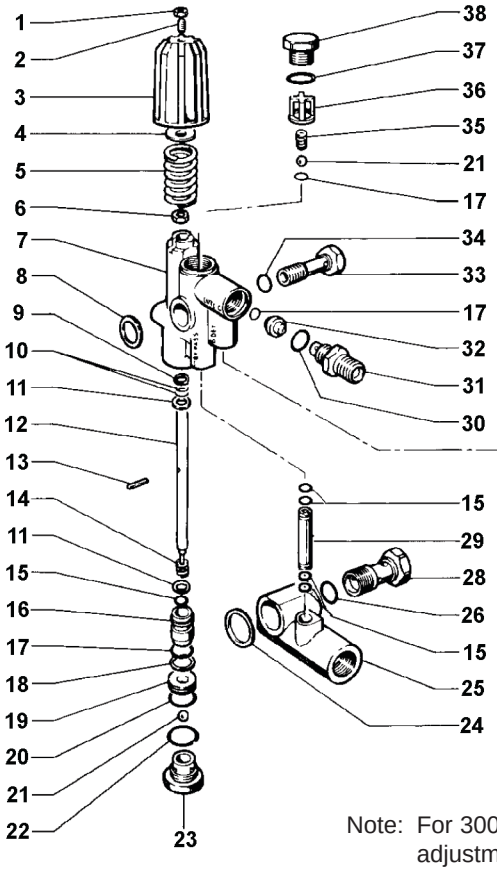

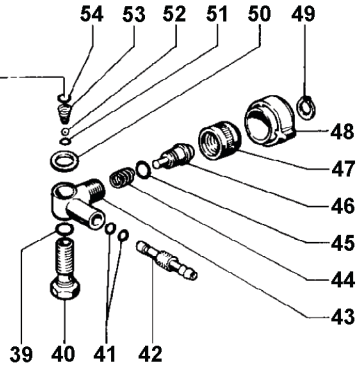

INSTALLATION

All Control Set Unloaders are shipped ready for right-hand mounting to pump. If left-hand mounting is desired, simply reverse chemical injector and valve bolts as shown in illustration.

Note: For 3000 PSI operation, be sure the pressure adjustment nut (Item 6) is screwed tightly (clockwise) on the piston guide (Item 13).

GENERAL PUMP 1174 Northland Drive • Mendota Heights, MN 55120

Phone: (651)686-2199 • Fax: (800)535-1745 • e-mail: sales@gpcompanies.com • www.generalpump.com

07/06

GENERAL PUMP