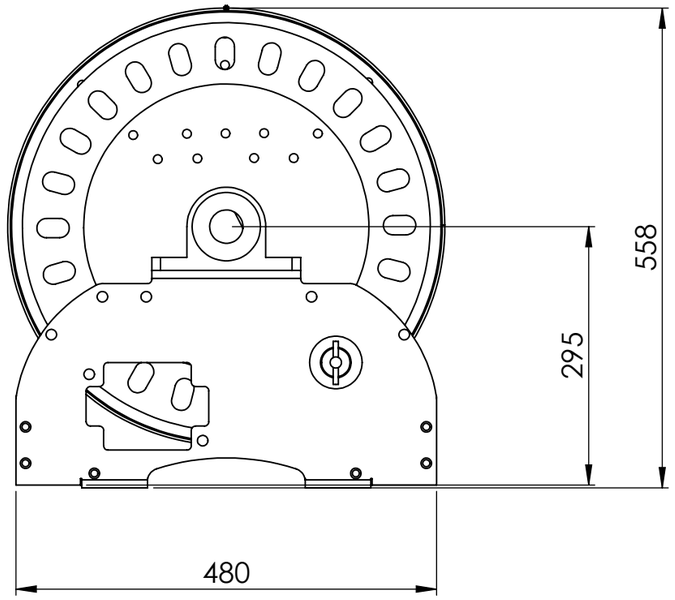

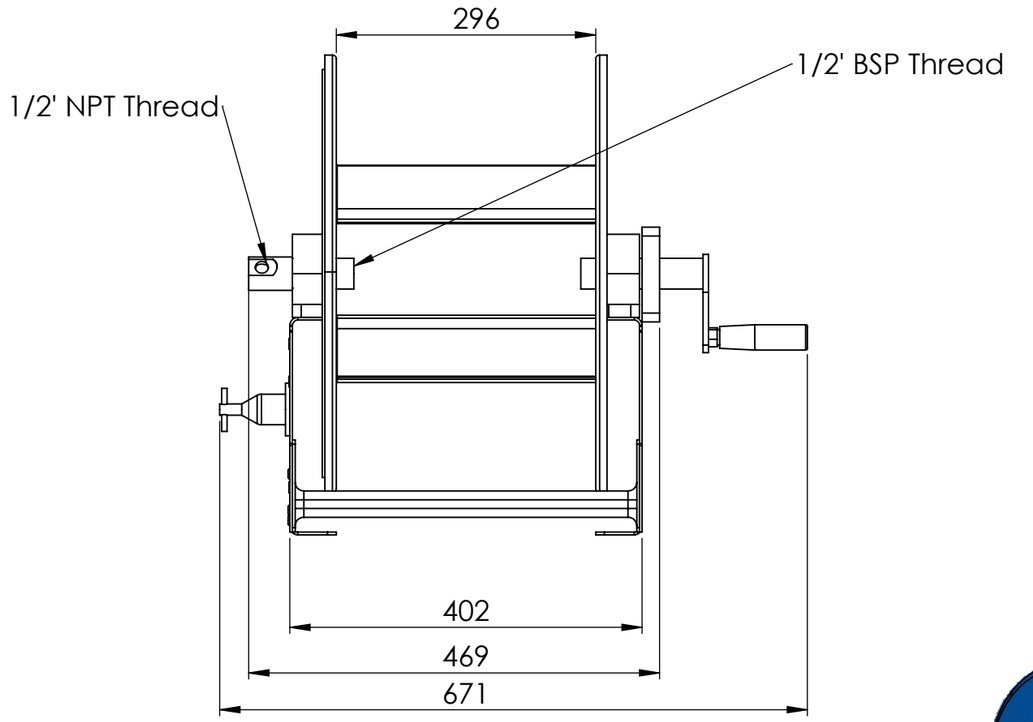

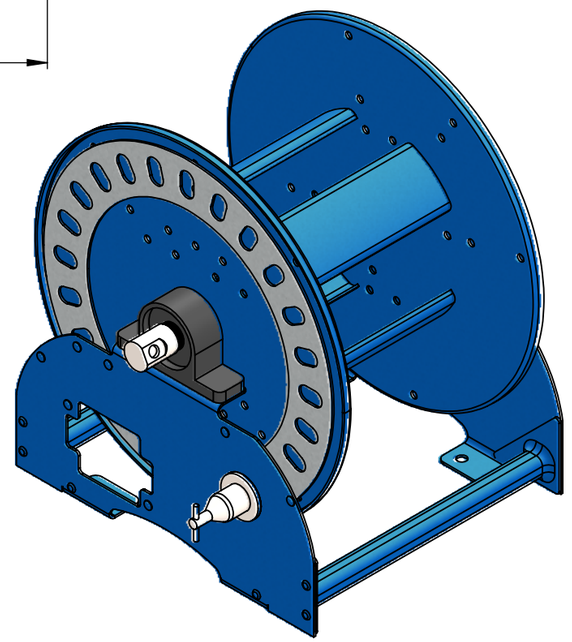

FOOTPRINT

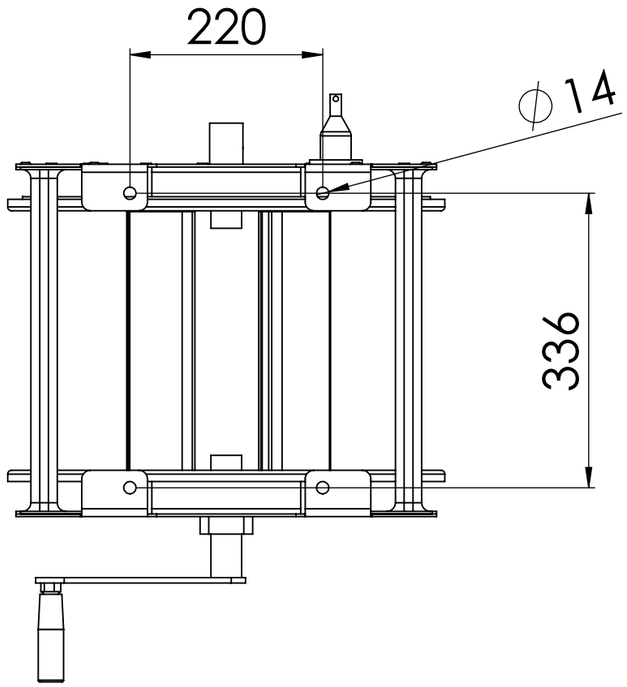

UNLESS OTHERWISE SPECIFIED: DIMENSIONS ARE IN MILLIMETERS SURFACE FINISH: TOLERANCES: LINEAR: ±1mm ANGULAR: ±0.5°	FINISH: Powder Coated Blue			DEBURR AND BREAK SHARP EDGES	B.A.R. Group P/L	
	NAME	SIGNATURE	DATE	REVISIONS		
DRAWN	Harrison F		02/07/2026	NO	NAME	DATE
CHK'D						
APPV'D						
MFG						
Q.A				MATERIAL: Various [See BOM]		
				WEIGHT: 4263.99		

PART NO. / PRODUCT

175 C12480300-EXHD
GA Drawing

DESCRIPTION
HP Reel 5000 psi c/w Super Swivel (A1)

A3

SCALE:1:7

SHEET 1 OF 1