PARTS LIST			
ITEM	QTY	PART NUMBER	DESCRIPTION
1	1	17006	ADAPTER SHAFT
2	1	17008SS	PUMP IMPELLER
3	1	17011SS	WEAR PLATE
4	1	17018	PUMP ADAPTER GASKET
5	1	17035SS	MECH. SEAL ASSY.
6	2	17130SS	5/16-18 X 1" FHSCS

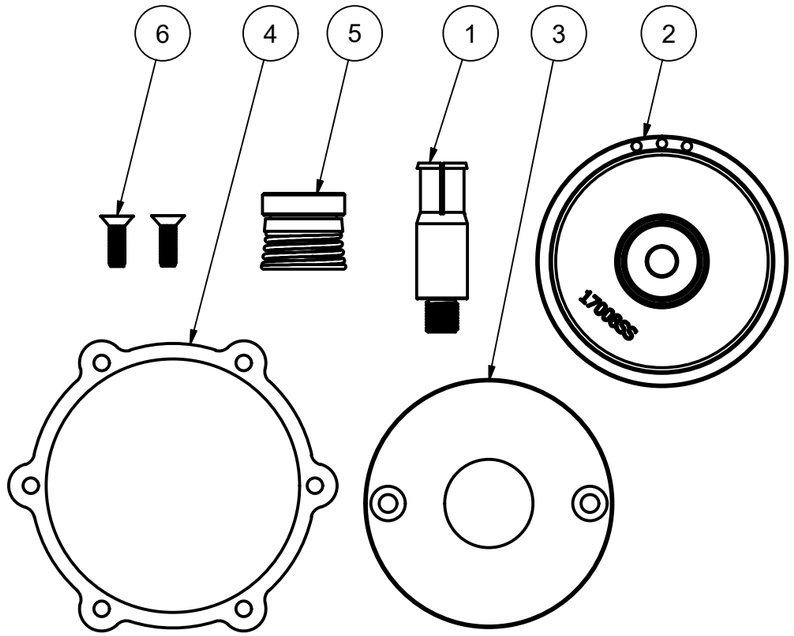



THIS DRAWING AND ALL INFORMATION CONTAINED THEREON ARE THE EXCLUSIVE PROPERTY OF BANJO CORPORATION.

UNLESS SPECIFICALLY NOTED, THIS DRAWING AND ITEMS SHOWN ON THIS DRAWING ARE SUBJECT TO CHANGE AT ANY TIME.

BANJO CORPORATION
150 BANJO DRIVE, CRAWFORDSVILLE, IN 47933
WEB SITE: WWW.BANJOCORP.COM
E-MAIL: BANJOSALES@IDEXCORP.COM

DESCRIPTION

REPAIR KIT FOR 2" S.S. PUMP

PART NUMBER

17100SS