NICOLINI HOLLOW SHAFT MOTORS

SKU: 165 T41337/5IN1C4K0
Motor: Three Phase
Power: 7.5 kW
Voltage: 240 / 415 V

Shaft Type: Hollow
Frame Size: 132M
Extras Included:
Thermal Switch

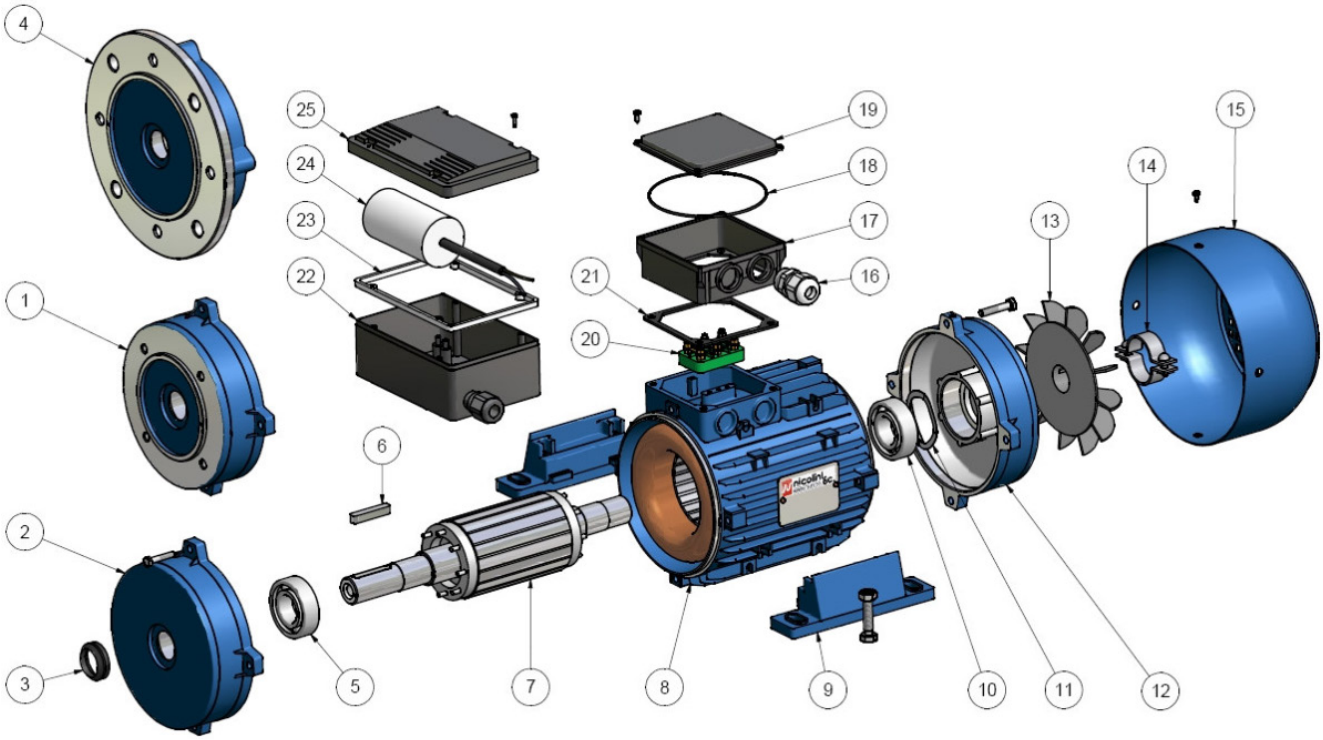

REF #	PART #	DESCRIPTION
2	01FAL132NINT3	Flange 132 IP S. 47
3	04ANVR0400001	Rubber seal ring 132
9	01PIEDE133002	Feet 132L
10	04CU06308ZZH1	Bearing 6308 ZZ
13 & 14	04VEN132PPL01	Fan & ring 132
15	04CV132VNER01	Fan cover 132

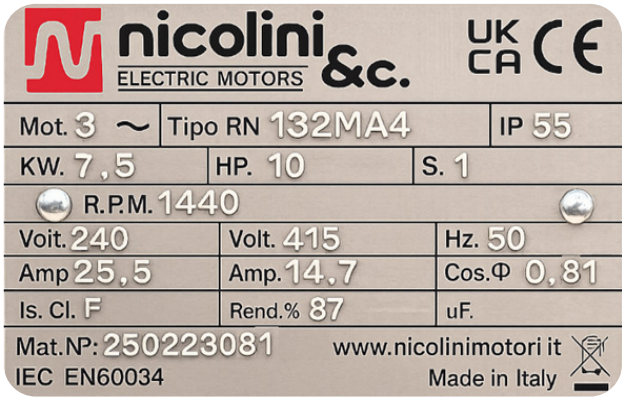

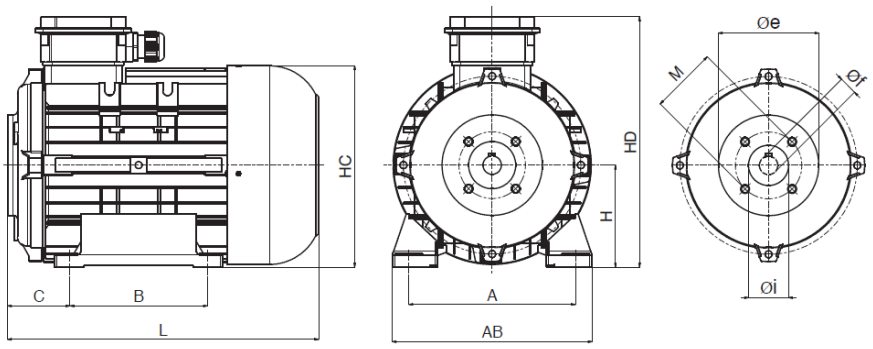

DIMENSIONS

H	A	B	C	AB	HC	HD	L
132 mm	216 mm	178 mm	80 mm	262 mm	260 mm	320 mm	400 mm