NICOLINI HOLLOW SHAFT MOTORS

SKU: 165 M41002/2IN2C3K0
Motor: Single Phase
Power: 2.2 kW
Voltage: 240 V

Shaft Type: Hollow
Frame Size: 100
Extras Included:
Thermal Switch

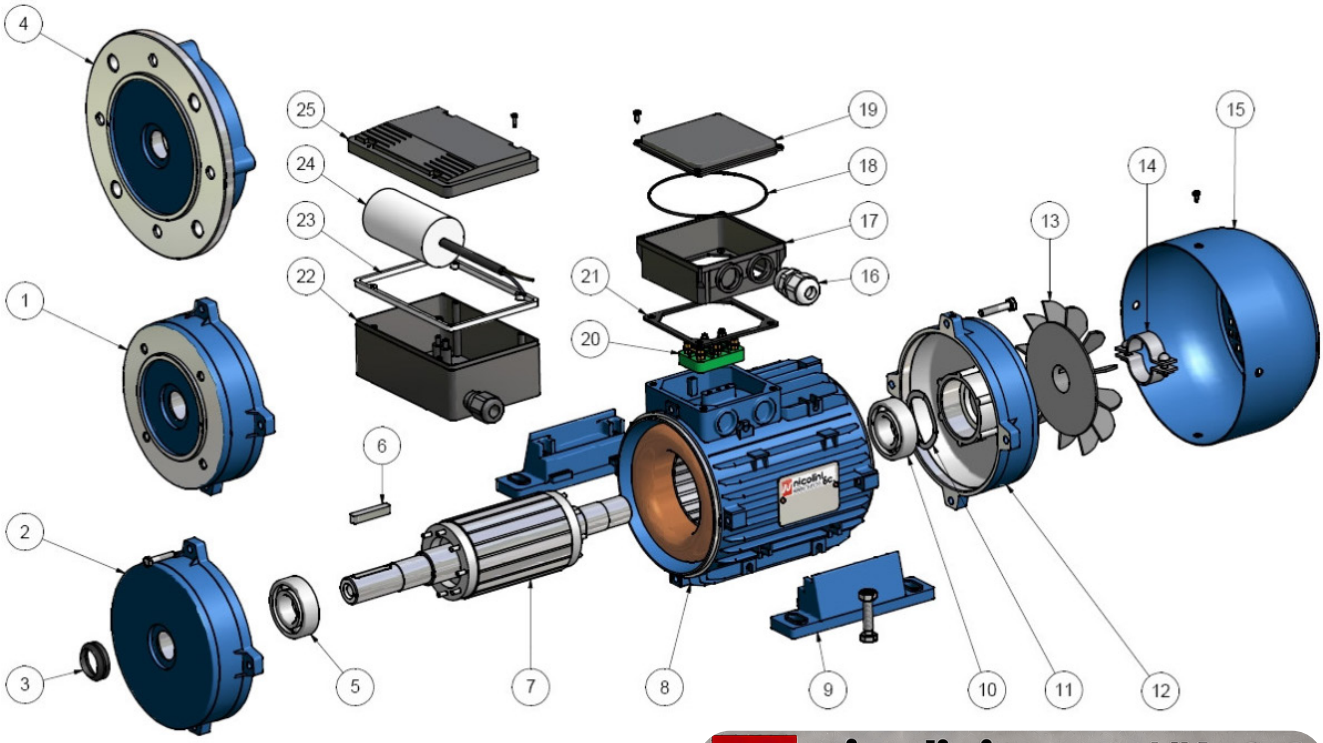

REF #	PART #	DESCRIPTION
2	01FAL100NIXT2	Flange 100 IP XT RAL 9005
3	04ANVR0300001	Rubber seal ring 100
10	04CU062062ZZ1	Bearing 6206 ZZ
13 & 14	04VEN100PPL01	Fan & fixing ring 100
15	04CV100VNER01	Fan cover RAL 9005
24	05COND650CAB1	Capacitor Uf 65

Saparate feet not available

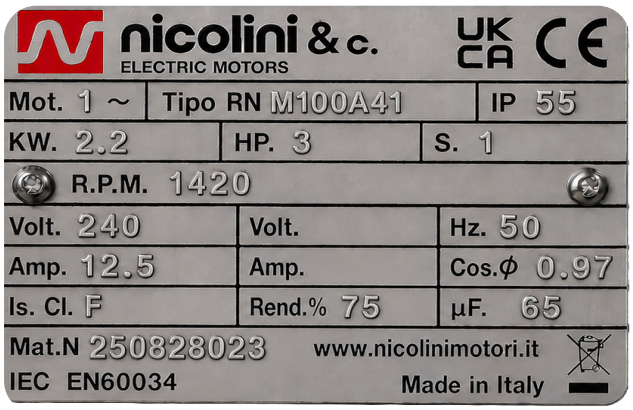

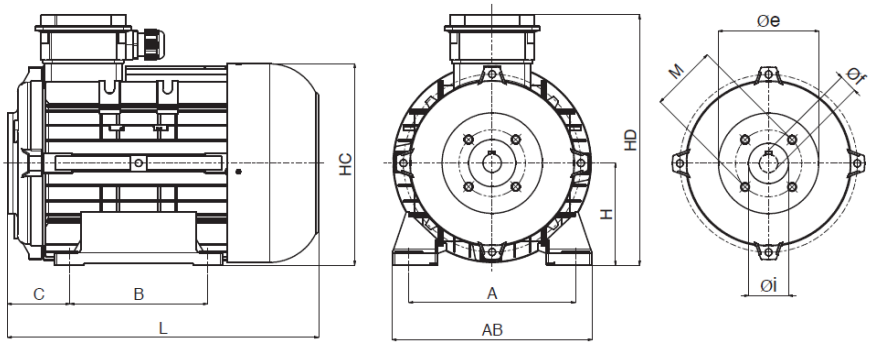

DIMENSIONS

H	A	B	C	AB	HC	HD	L
100 mm	160 mm	140 mm	57 mm	200 mm	200 mm	250 mm	305 mm