165 M40911/5IN2C7D0
PARTS DIAGRAM

NICOLINI HOLLOW SHAFT MOTORS

SKU: 165 M40911/5IN2C7D0
Motor: Single Phase
Power: 1.5 kW
Voltage: 240 V

Shaft Type: Hollow
Frame Size: 90L
Extras Included:
On / Off Switch

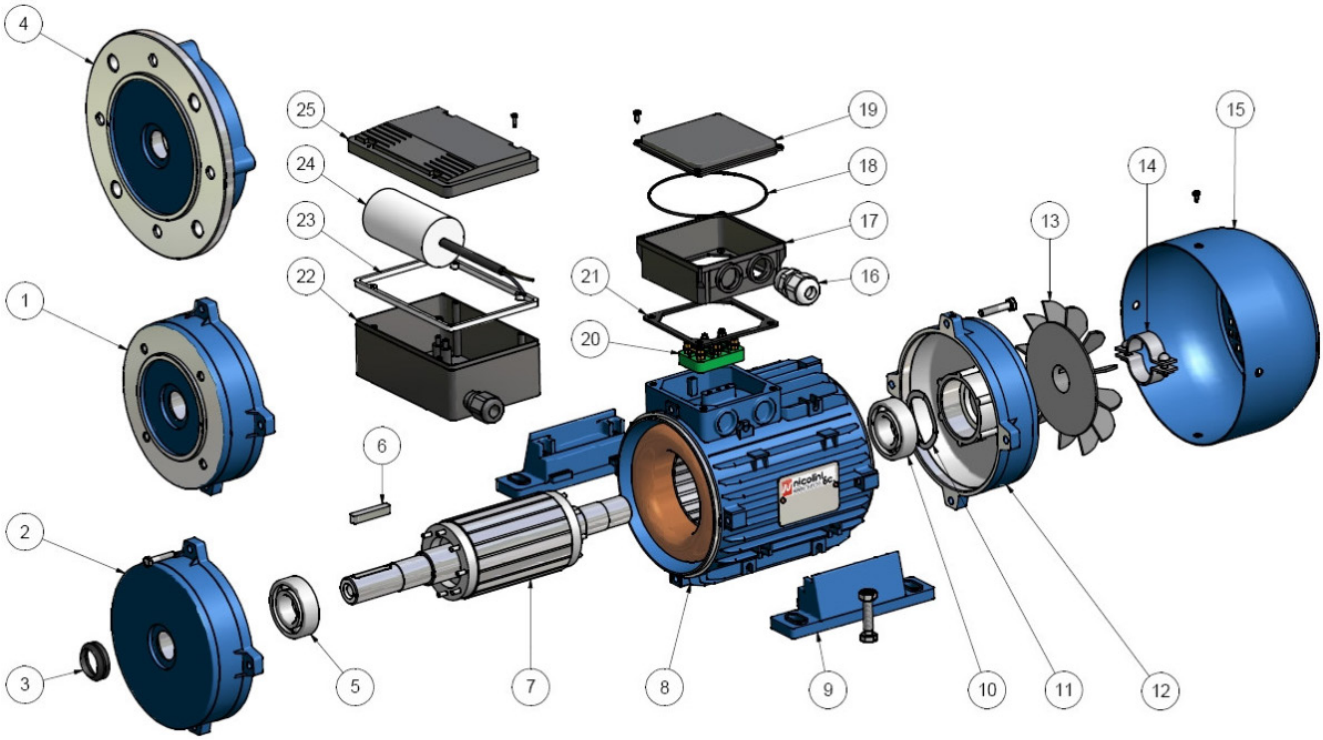

REF #	PART #	DESCRIPTION
2	01FAL090NINT1	Flange 90L IP XT RAL 9005
3	04ANVR0250001	Rubber seal ring 90L
10	04CU062052ZZ1	Bearing 6205 ZZ
13 & 14	04CU062052ZZ1	Fan & fixing ring 90L
15	04CV090VNER01	Fan cover 90L RAL 9005
24	05COND550CAB1	Capacitor Uf 55

Saparate feet not available



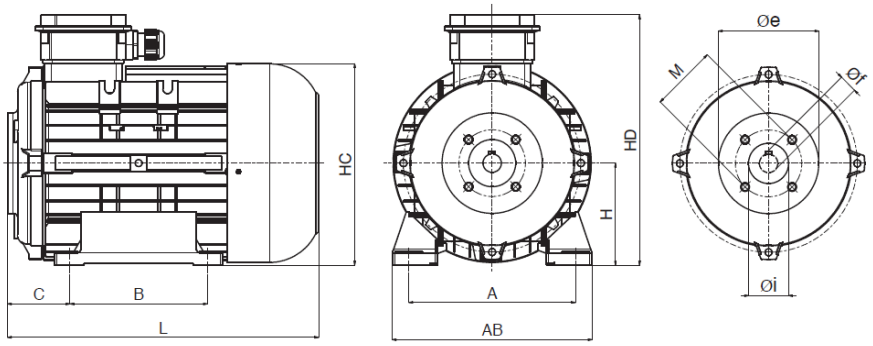

DIMENSIONS

H	A	B	C	AB	HC	HD	L
90 mm	140 mm	125 mm	52 mm	182 mm	180 mm	230 mm	275 mm