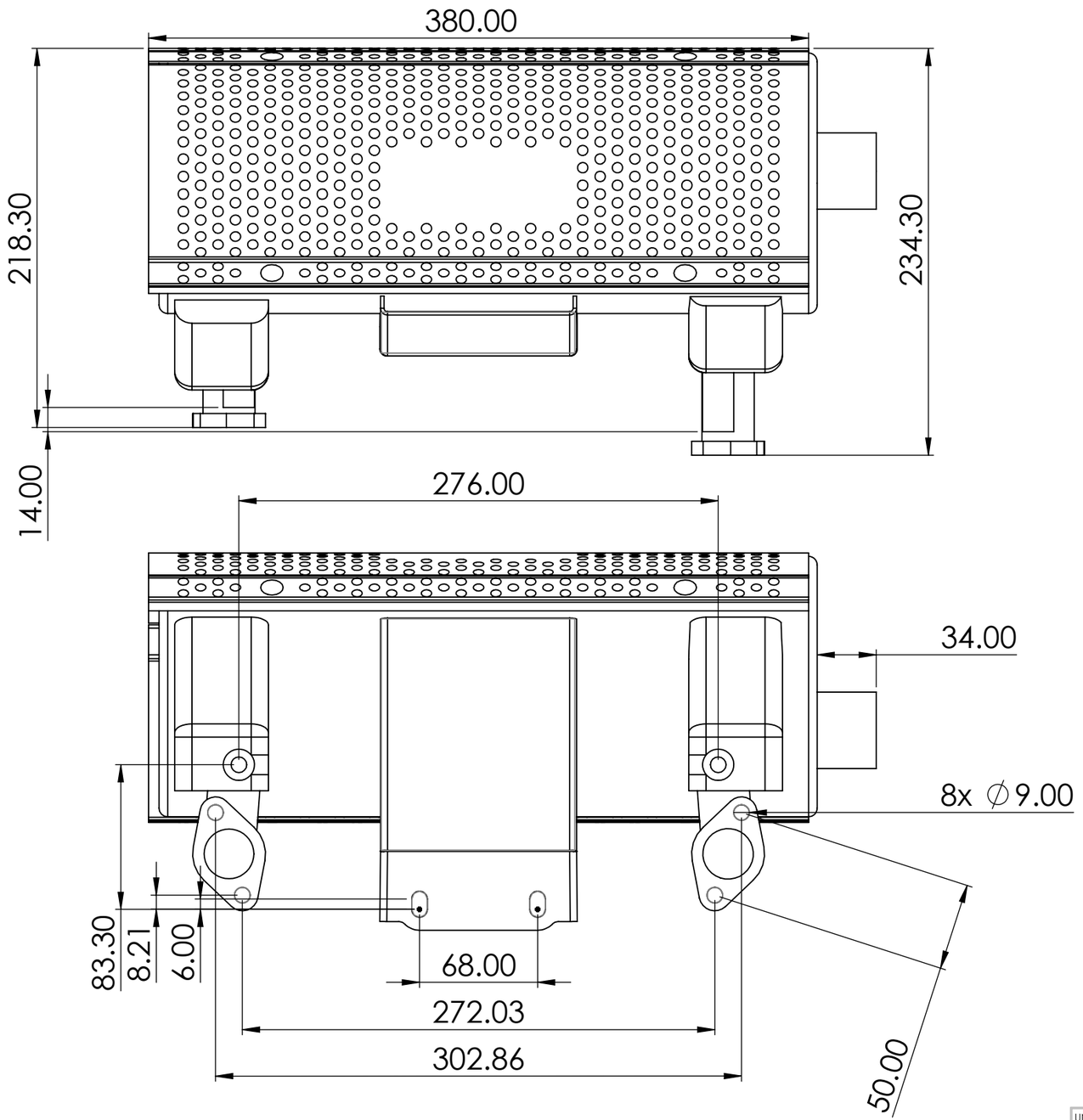


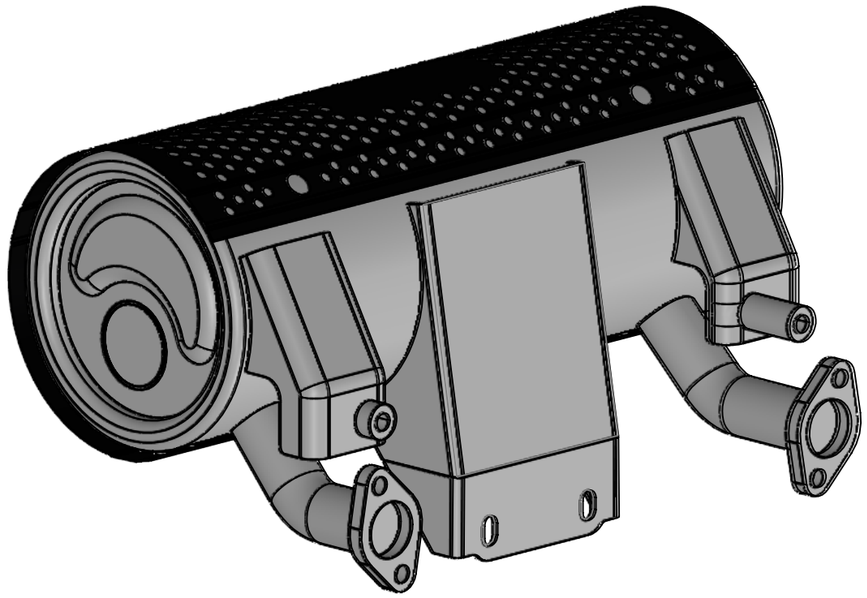

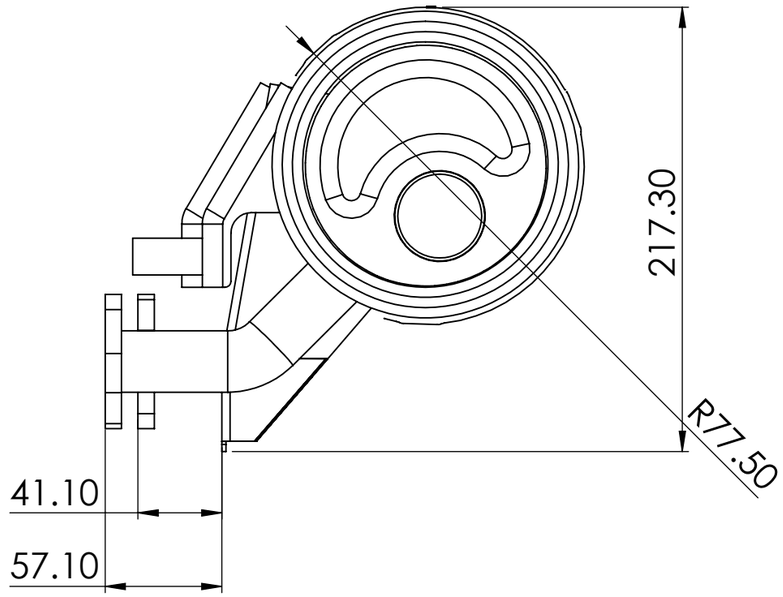


| | | | | | | |
|---|---|---|---|---|---|---|
| UNLESS OTHERWISE SPECIFIED:<br>DIMENSIONS ARE IN MILLIMETERS<br>SURFACE FINISH:<br>TOLERANCES:<br>LINEAR: ±1mm<br>ANGULAR: ±0.5° | FINISH: | | DEBURR AND BREAK SHARP EDGES | B.A.R. Group P/L | | |
| | NAME | SIGNATURE | DATE | REVISIONS | | |
| DRAWN | Harrison F | | 14/04/26 | NO | NAME | DATE |
| CHK'D | | | | | | |
| APPV'D | | | | | | |
| MFG | | | | | | |
| Q.A | | | | MATERIAL: Various [See BOM] | | |
| | | | | WEIGHT: 6827.48 | | |

PART NO. / PRODUCT

# 165 06183-Z6L-802
# GA Drawing

DESCRIPTION: Honda GX690/800 Muffler

A3

SCALE:1:3

SHEET 1 OF 1