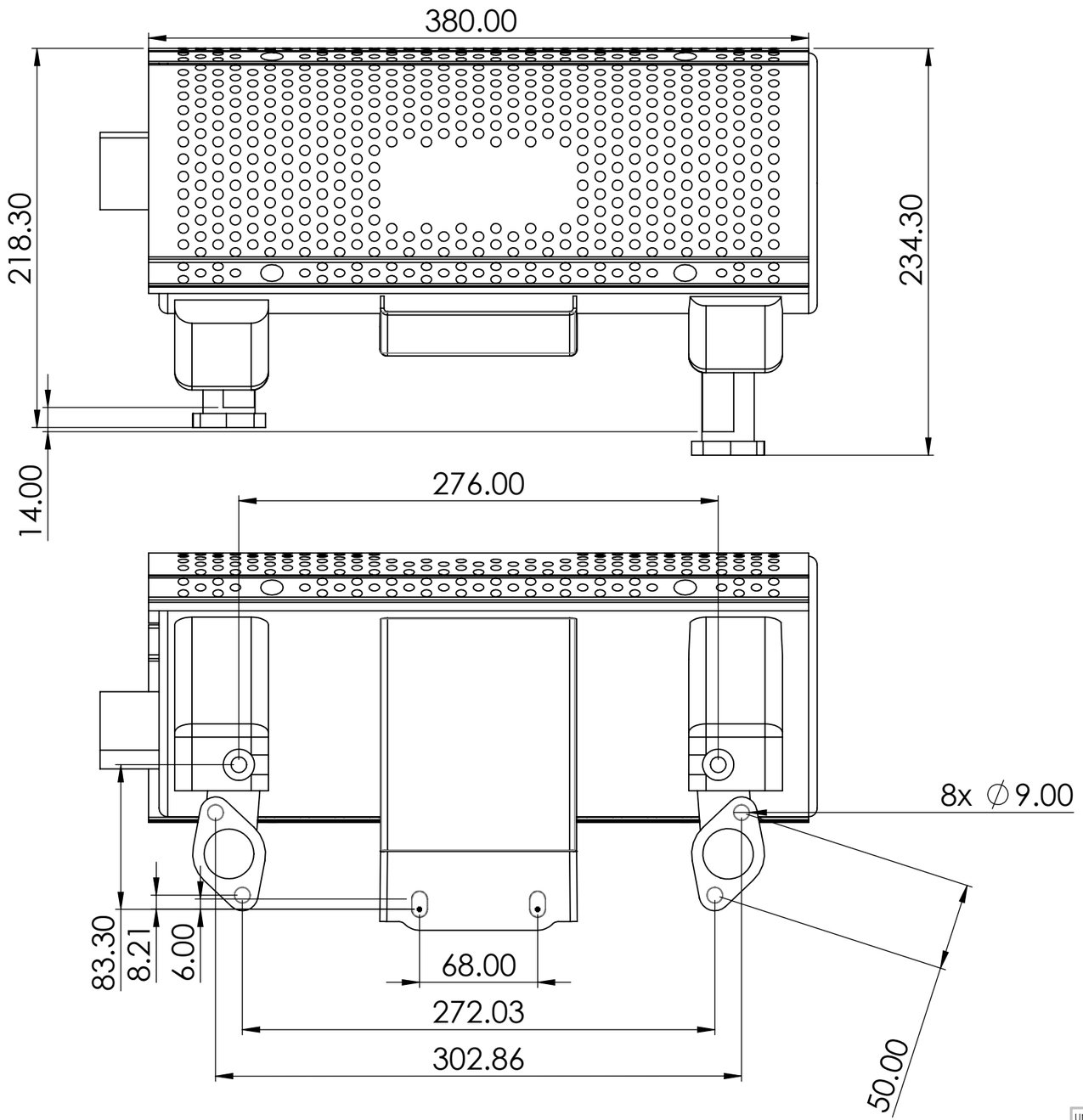

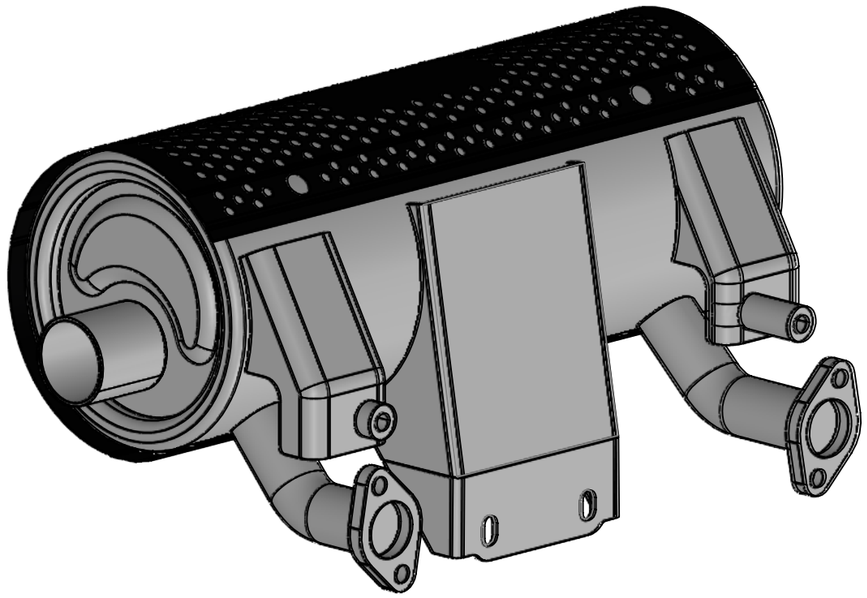

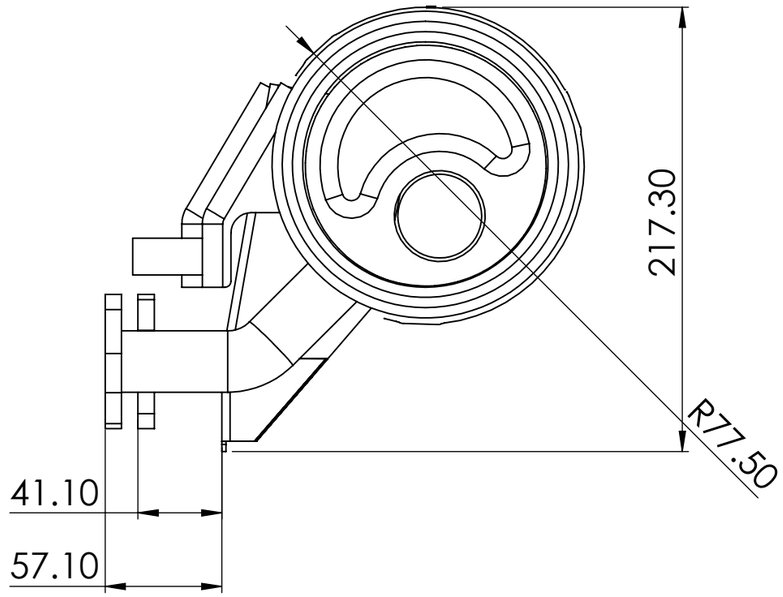

UNLESS OTHERWISE SPECIFIED: DIMENSIONS ARE IN MILLIMETERS SURFACE FINISH: TOLERANCES: LINEAR: ±1mm ANGULAR: ±0.5°	FINISH:		DEBURR AND BREAK SHARP EDGES	B.A.R. Group P/L		
	NAME	SIGNATURE	DATE	REVISIONS		
DRAWN	Harrison F		14/04/26	NO	NAME	DATE
CHK'D						
APPV'D						
MFG						
Q.A				MATERIAL: Various [See BOM]		
				WEIGHT: 6757.11		

PART NO. / PRODUCT

165 06183-Z6L-020
GA Drawing

DESCRIPTION: Honda GX690/800 Muffler

A3

SCALE:1:3

SHEET 1 OF 1