Model 1460

Version:

Serial number:

Code: **26218**

05/06/2017

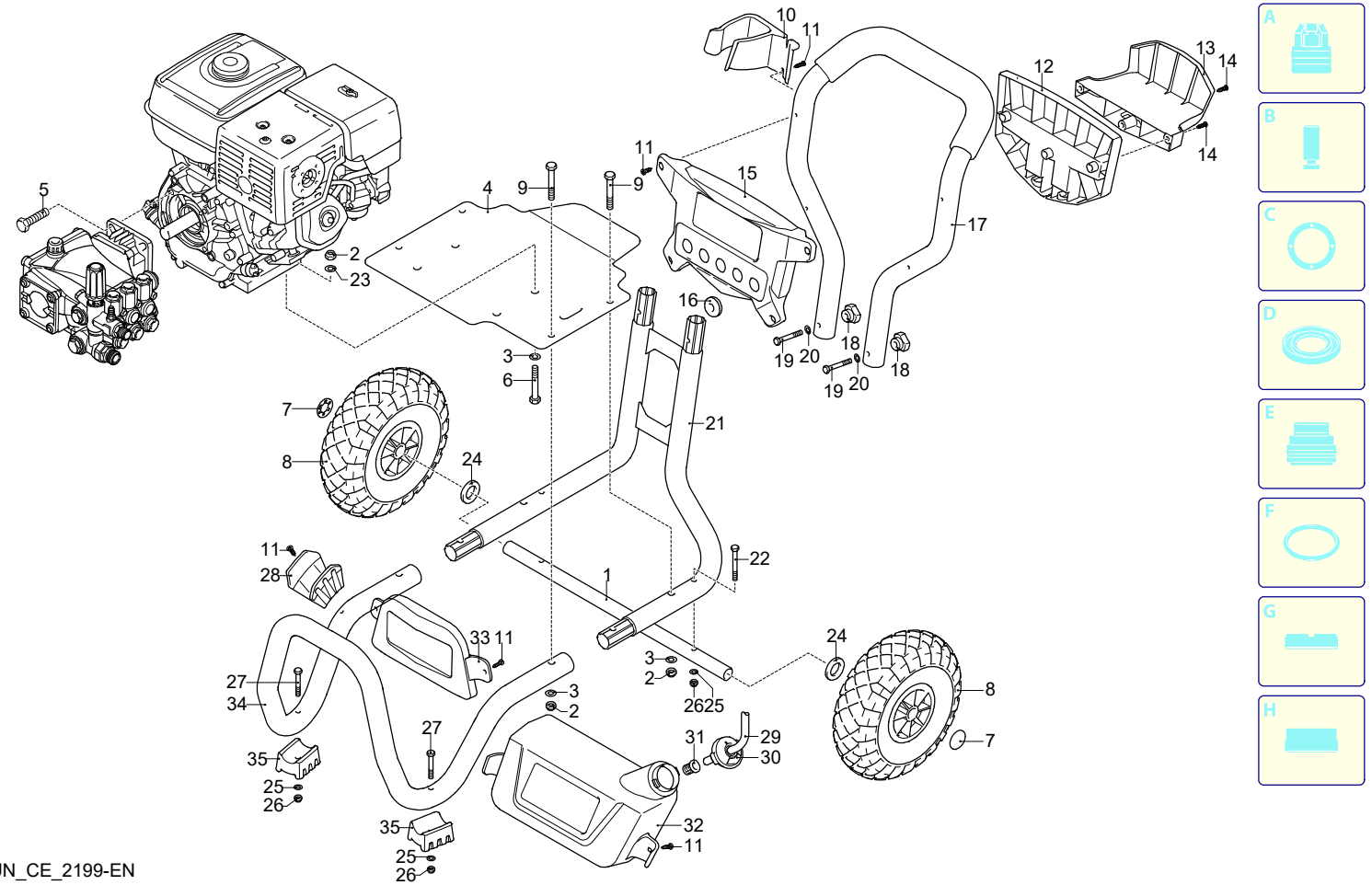

Validity	Pos.	Code	Description	Q
	1	4000150	Axle	1
	2	2240110	Nut	8
	3	390311	Washer	8
	4	4000090	Support	1
	5	961900	Screw	4
	6	200230	Screw	4
	7	50016	Plug	2
	8	4000730	Wheel	2
	9	621780	Screw	4
	10	4000210	Accessories carrier	1
	11	2060200	Screw	8
	12	4000230	Guard	1
	13	4000260	Accessories carrier	1
	14	2100300	Screw	3
	15	4000220	Support	1
	16	4000790	Nozzle holder	5
	17	4000110	Handle	1
	18	50019	Knob	2
	19	4000360	Screw	2
	20	4000860	Washer	2
	21	4000080	Frame	1
	22	4000390	Screw	2
	23	320620	Washer	4
	24	4000780	Spacer	2
	25	550331	Washer	4
	26	3000170	Nut	4
	27	4000370	Screw	2
	28	4000240	Accessories carrier	1
	29	2901000	Detergent hose	1
	30	4000750	Plug	1
	31	2000230	Filter	1
	32	4000290	Tank	1
	33	4000300	Guard	1
	34	4000100	Frame	1
	35	4000400	Foot	2

UN_CE_2199-EN

Model 1460

Version:

Serial number:

Code: **26218**

05/06/2017

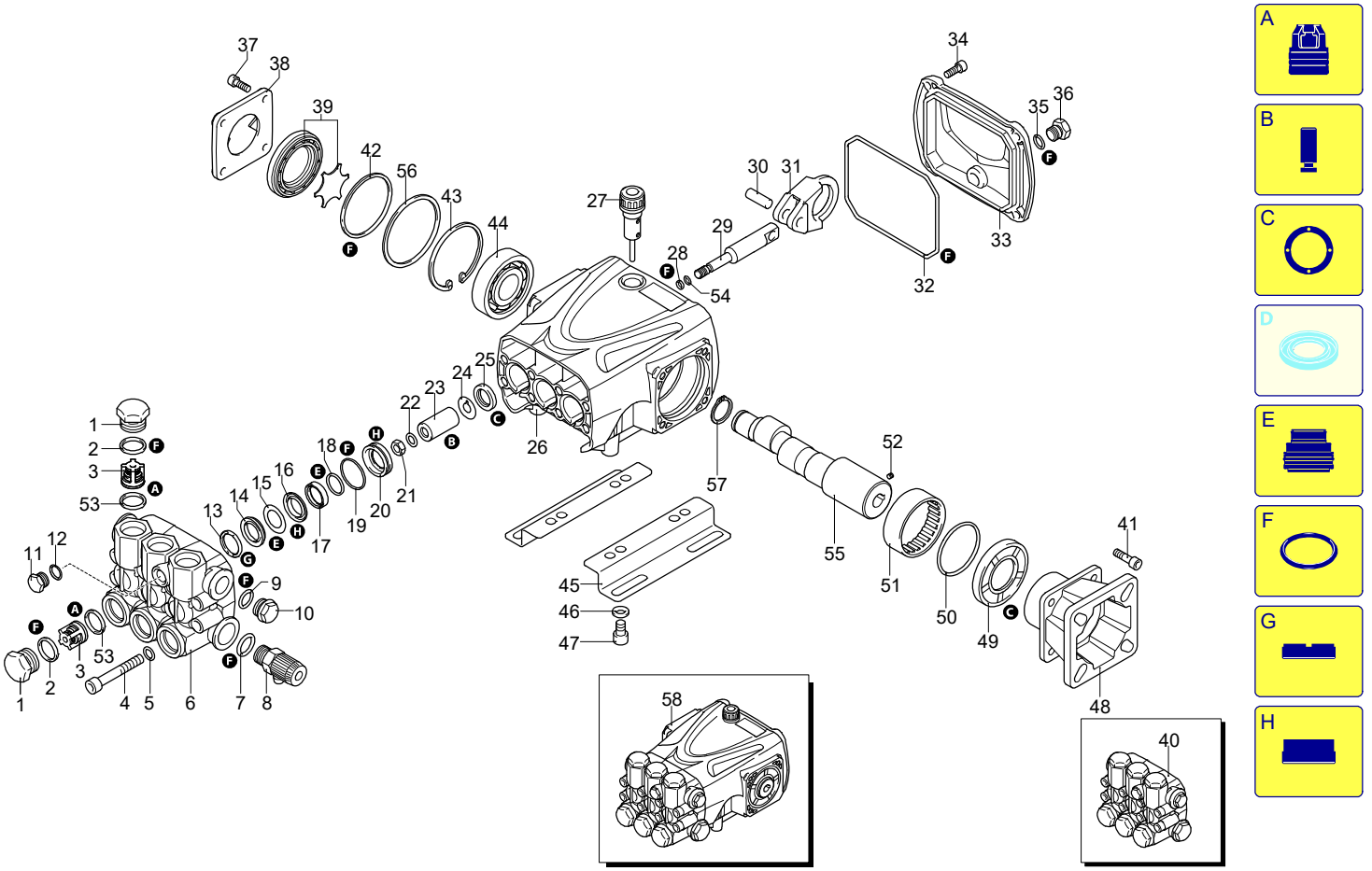

UN_CE_2194-EN

Validity	Pos.	Code	Description	Q
	1	960090	Plug	6
	2	960160	O-ring	6
	3	889052	Complete valve	6
	4	800860	Screw	8
	5	1381850	Washer	8
	6	3220090	Head	1
	7	180101	O-ring	1
	8	50129	Valve	1
	9	740290	O-ring	1
	10	1980740	Plug	1
	11	880581	Plug	1
	12	820510	O-ring	1
	13	2760220	Ring	3
	14	1342761	Water seal	3
	15	3200680	Ring	3
	16	3220150	Piston guide	3
	17	3200690	Gasket	3
	18	3200700	Ring	3
	19	770260	O-ring	3
	20	3220140	Piston guide	3
	21	1260110	Nut	3
	22	1260100	Washer	3
	23	1780070	Piston	3
	24	1260091	Plate	3
	25	1260460	Oil seal	3
	26	3220010	Pump body	1
	27	880130	Plug	1
	28	480480	O-ring	3
	29	3220060	Piston	3
	30	3220070	Pin	3
	31	3220040	Connecting-rod	3
	32	651540	O-ring	1
	33	3220030	Cover	1
	34	3200220	Screw	4
	35	820510	O-ring	1
	36	880581	Plug	1
	37	1200430	Screw	4
	38	3200070	Support	1
	39	3229603	Oil level assembly	1
	40	3229201	Head assembly	1
	41	780330	Screw	4
	42	650560	O-ring	1
	43	200390	Ring	1
	44	1981210	Bearing	1
	45	3200210	Foot	2
	46	1322640	Washer	4
	47	850250	Screw	4
	48	3220230	Flange	1
	49	3220270	Ring	1
	50	3220430	O-ring	1
	51	3220260	Bearing	1
	52	820440	Screw	1
	53	880830	O-ring	6
	54	1080550	Ring	3
	55	3220450	Shaft	1
	56	3220780	Ring	1
	57	1260770	Ring	1
	58	23791	Pump	1
	A	1828	Valve kit	1
	B	2739	Piston kit	1
	C	42555	Oil seal kit	1
	E	42556	Water seal kit	1

Model 1460

Version:

Serial number:

Code: **26218**

05/06/2017

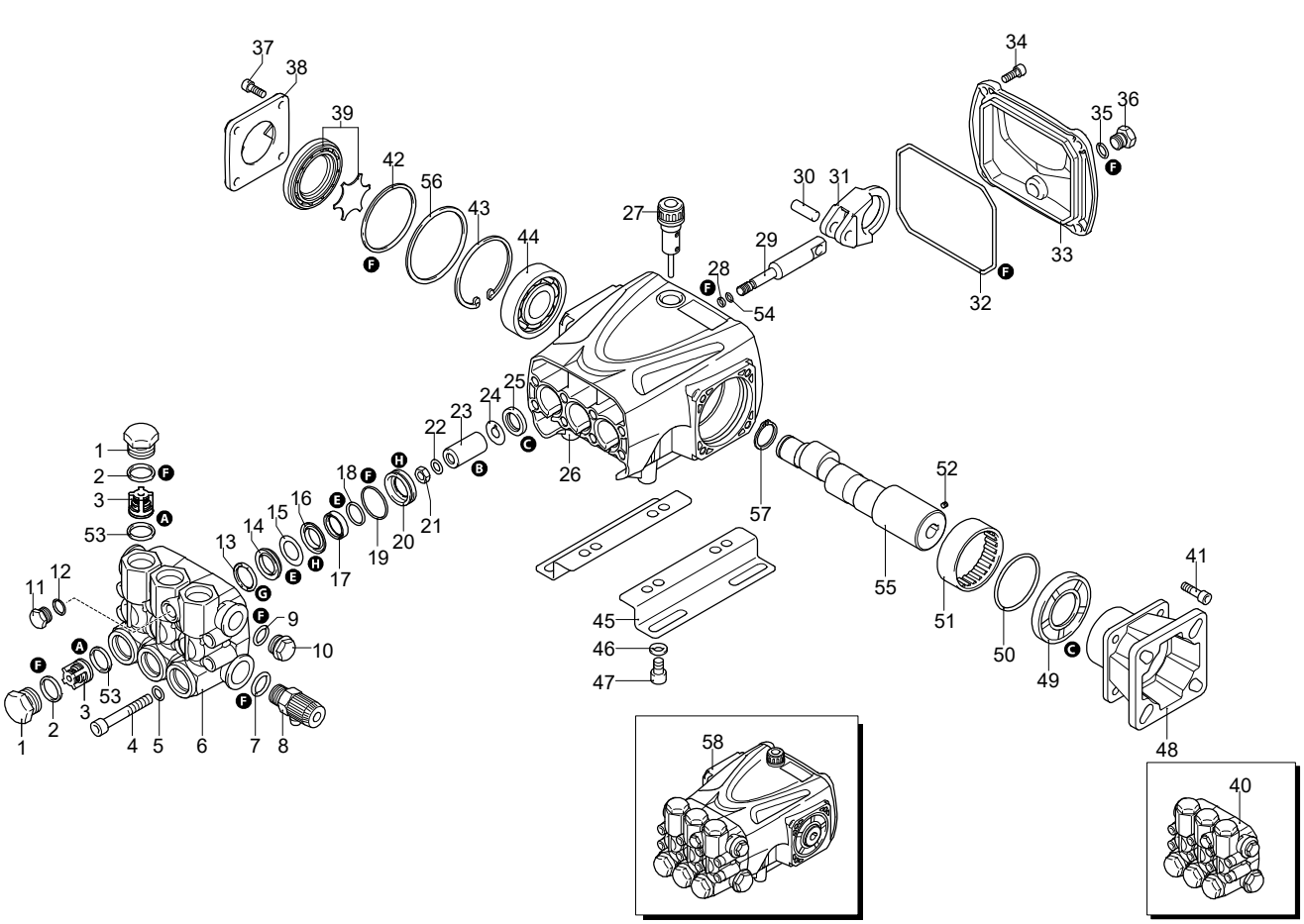

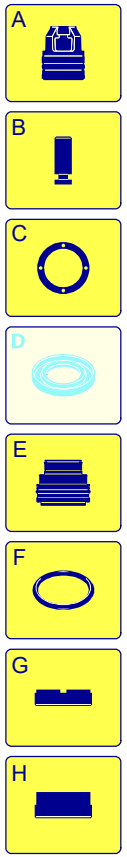

Validity	Pos.	Code	Description	Q
	F	42550	Gasket kit	1
	G	2191	Support ring kit	1
	H	42557	Piston guide kit	1

UN_CE_2194-EN

Model 1460

Version:

Serial number:

Code: **26218**

05/06/2017

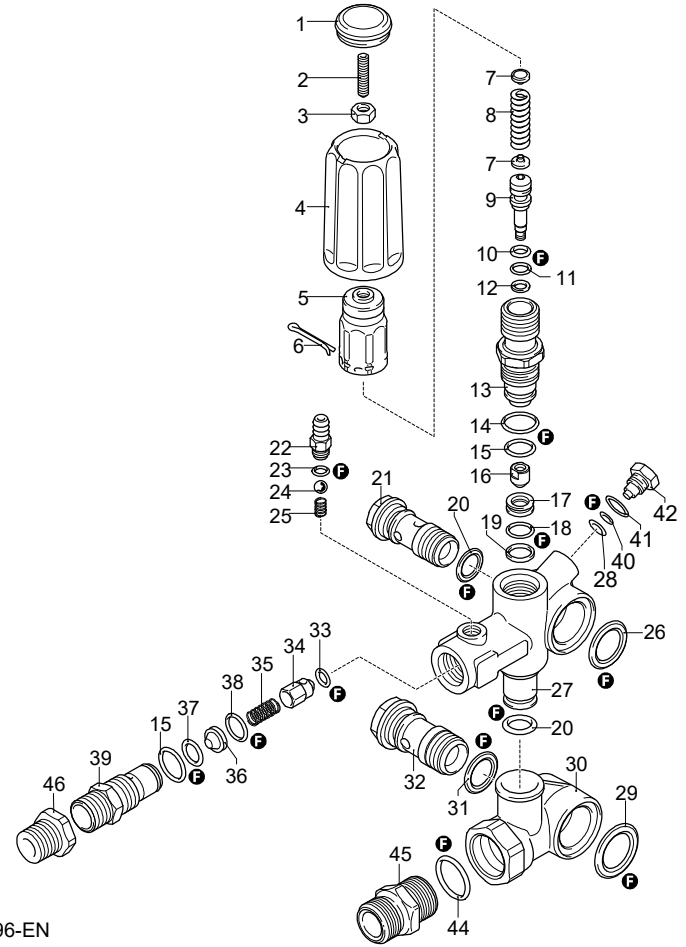

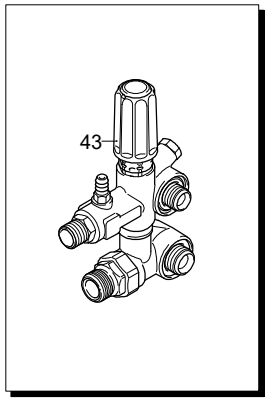

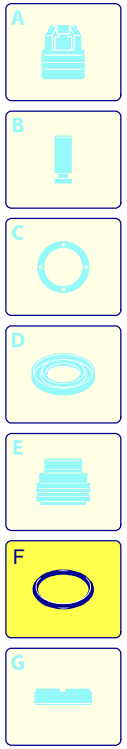

Validity	Pos.	Code	Description	Q
	1	3200500	Plug	1
	2	2840970	Screw	1
	3	1060120	Nut	1
	4	3740030	Knob	1
	5	2500540	Insert	1
	6	2500550	Split pin	1
	7	1980220	Wobble plate	2
	8	2760410	Spring	1
	9	2760400	Piston	1
	10	2260100	O-ring	1
	11	660190	O-ring	1
	12	2760210	Ring	1
	13	2760570	Guide	1
	14	1200690	O-ring	1
	15	394280	O-ring	2
	16	2260070	Shutter	1
	17	2760980	Seat	1
	18	770140	O-ring	1
	19	2760640	Ring	1
	20	390080	O-ring	2
	21	1540272	Screw	1
	22	1982520	Hose tail	1
	23	480480	O-ring	1
	24	1250280	Ball	1
	25	1560520	Spring	1
	26	2260190	O-ring	1
	27	3740010	Valve body	1
	28	1120681	O-ring	1
	29	1540630	O-ring	1
	30	3740020	Body	1
	31	880270	O-ring	1
	32	2260420	Screw	1
	33	2101770	O-ring	1
	34	2760131	Shutter	1
	35	2760200	Spring	1
	36	2760120	Insert	1
	37	1470210	O-ring	1
	38	2760270	O-ring	1
	39	2760230	Fitting	1
	40	2260480	Ring	1
	41	600180	O-ring	1
	42	3740100	Plug	1
	43	24591	Complete valve	1
	44	480440	O-ring	1
	45	3600760	Fitting	1
	46	1122260	Fitting	1
	F	43017	Gasket kit	1

UN_CE_2196-EN

Model 1460

Version:

Serial number:

Code: **26218**

05/06/2017

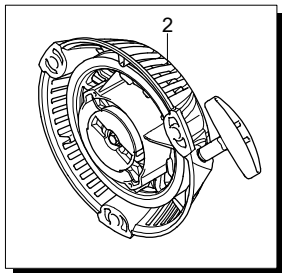

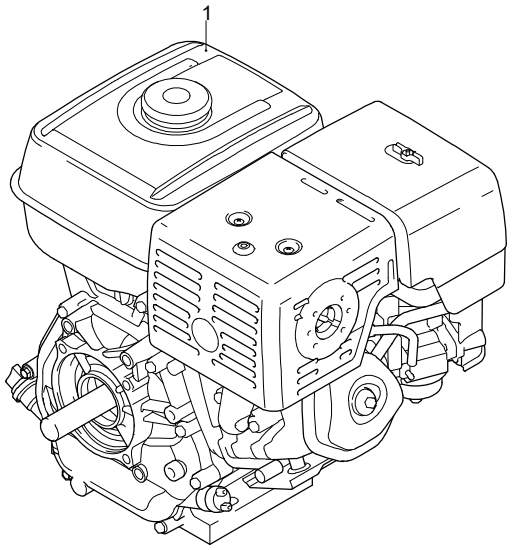

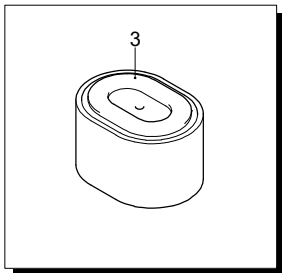

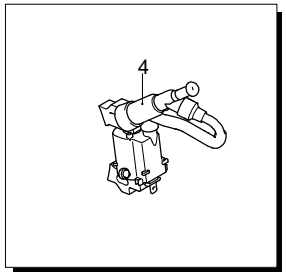

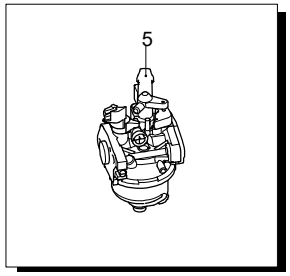

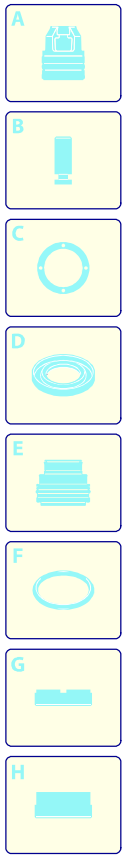

Validity	Pos.	Code	Description	Q
	1	4925	Motor	1
	2	51798	Start	1
	3	51797	Filter	1
	4	51805	Coil	1
	5	51804	Carburetor	1

UN_CE_2198-EN

Model 1460

Version:

Serial number:

Code: **26218**

05/06/2017

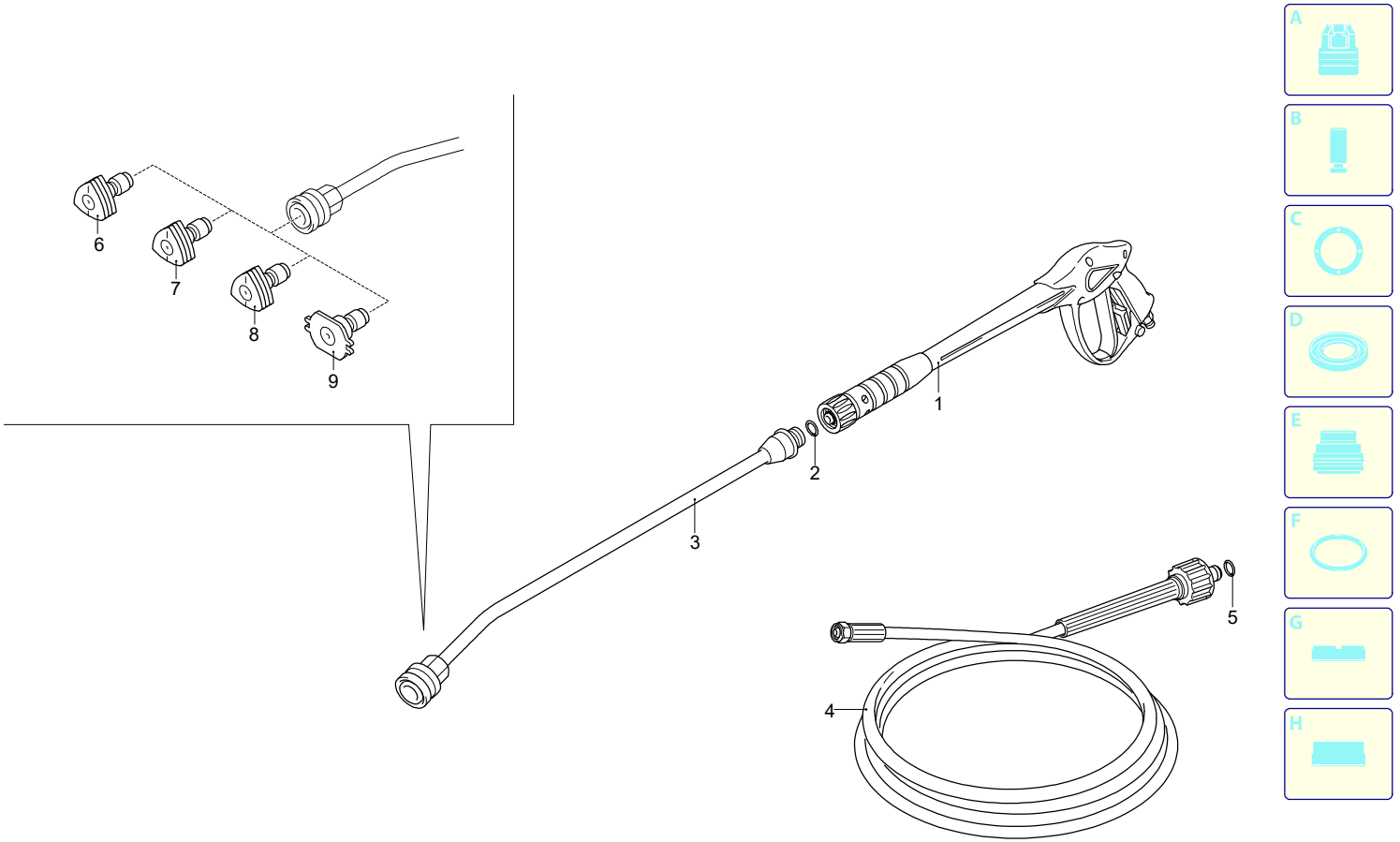

Validity	Pos.	Code	Description	Q
	1	43524	Gun	1
	2	391000	O-ring	1
	3	3600650	Lance	1
	4	1700981	High pressure hose	1
	5	2000570	O-ring	1
	6	3600930	Nozzle (0°)	1
	7	3600940	Nozzle (15°)	1
	8	3600960	Nozzle (40°)	1
	9	3600400	Nozzle (low pressure)	1