Model 1450

Version:

Serial number:

Code: **26217**

02/03/2018

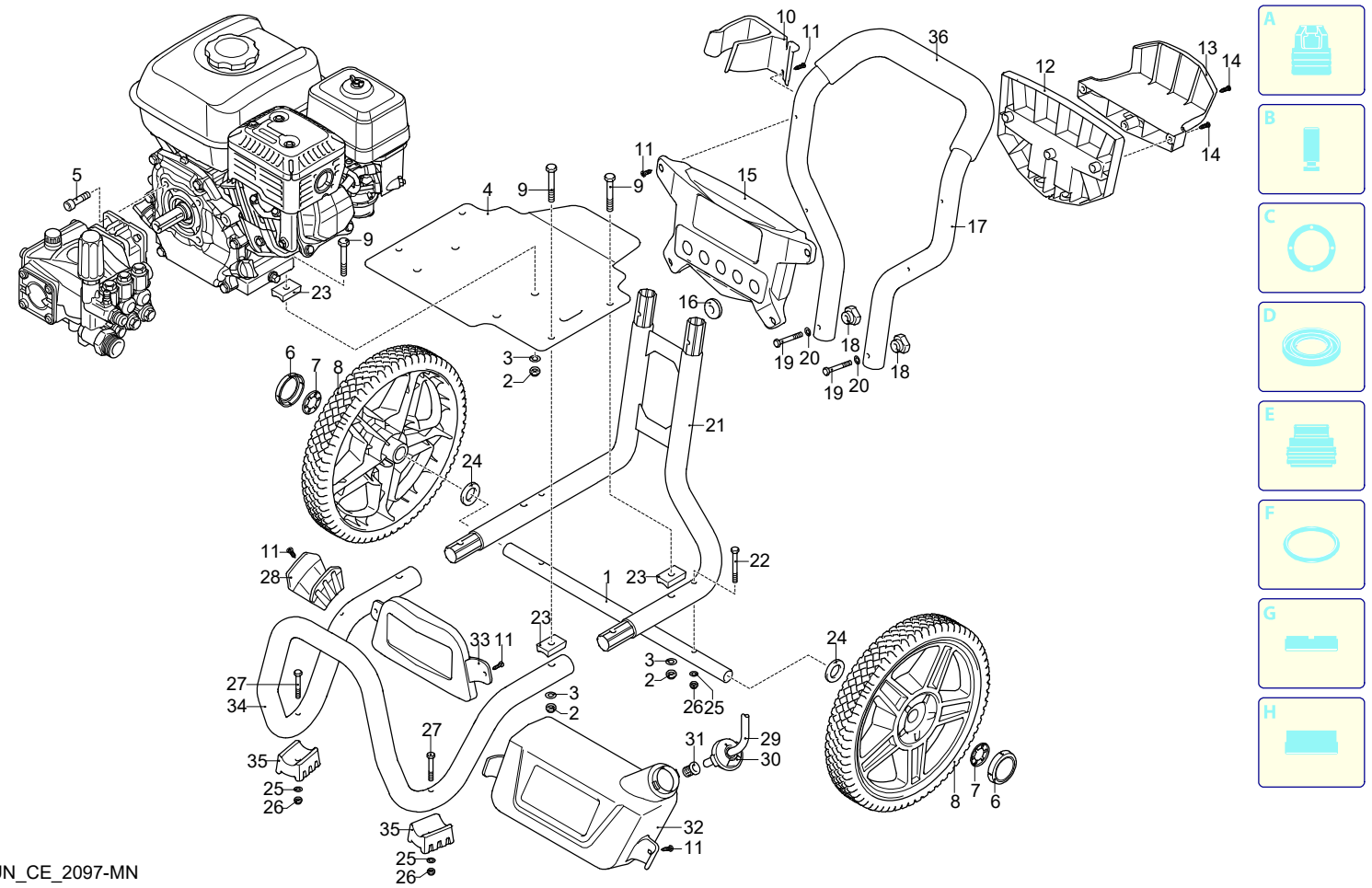

UN_CE_2097-MN

Validity	Pos.	Code	Description	Q
	1	4008610	Axle	1
	2	160311	Nut	8
	3	390311	Washer	8
	4	4000030	Support	1
	5	180432	Screw	4
	6	4000610	Cover	2
	7	380620	Washer	2
	8	4000320	Wheel	2
	9	621780	Screw	4
	10	4000210	Accessories carrier	1
	11	2060200	Screw	8
	12	4000230	Guard	1
	13	4000260	Accessories carrier	1
	14	2100300	Screw	3
	15	4000220	Support	1
	16	4000790	Nozzle holder	5
	17	4000060	Handle	1
	18	50019	Knob	2
	19	4000360	Screw	2
	20	4000860	Washer	2
	21	4000010	Frame	1
	22	4000830	Screw	2
	23	4000350	Spacer	8
	24	4000780	Spacer	2
	25	550331	Washer	4
	26	3000170	Nut	4
	27	4000370	Screw	2
	28	4000240	Accessories carrier	1
	29	1270960	Detergent hose	1
	30	4000750	Plug	1
	31	2000230	Filter	1
	32	4000160	Tank	1
	33	4000180	Guard	1
	34	4000050	Frame	1
	35	4000400	Foot	2
	36	4000770	Knob	1

Model 1450

Version:

Serial number:

Code: **26217**

02/03/2018

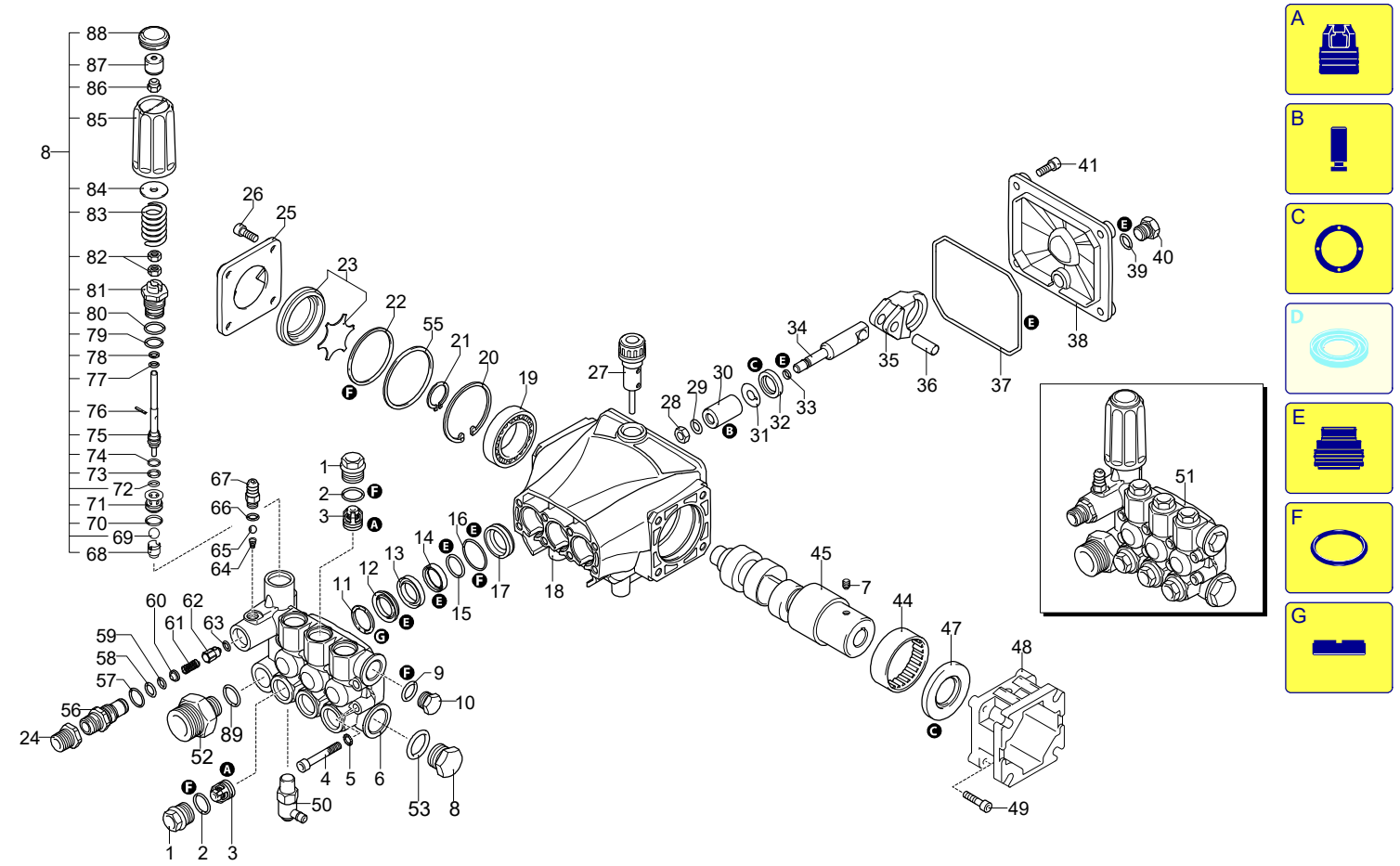

Validity	Pos.	Code	Description	Q
	1	3200110	Plug	6
	2	1200690	O-ring	6
	3	2769050	Complete valve	6
	4	800410	Screw	8
	5	1381550	Washer	8
	6	3200930	Head	1
	7	820440	Screw	1
	8	42712	Valve kit adjustment	1
	9	740290	O-ring	1
	10	1980740	Plug	1
	11	2760220	Ring	3
	12	1342761	Water seal	3
	13	3200160	Piston guide	3
	14	3200690	Gasket	3
	15	3200700	Ring	3
	16	770590	O-ring	3
	17	3200150	Piston guide	3
	18	3200010	Pump body	1
	19	1780490	Bearing	1
	20	1260790	Ring	1
	21	1780550	Ring	1
	22	395081	O-ring	1
	23	3209615	Oil level assembly	1
	24	1122260	Fitting	1
	25	3200070	Support	1
	26	1200430	Screw	4
	27	880130	Plug	3
	28	1260110	Nut	3
	29	1260100	Washer	3
	30	1260120	Piston	3
	31	1260091	Plate	3
	32	1260460	Oil seal	3
	33	480480	O-ring	3
	34	3200060	Piston	3
	35	3200040	Connecting-rod	3
	36	1780050	Pin	3
	37	2760280	O-ring	1
	38	3200030	Cover	1
	39	820510	O-ring	1
	40	880581	Plug	1
	41	3200220	Screw	4
	44	1321190	Bearing	1
	45	3200350	Shaft	1
	47	480671	Ring	1
	48	1320050	Flange	1
	49	1200430	Screw	4
	50	2761380	Valve	1
	51	3209222	Head assembly	1
	52	2841070	Fitting	1
	53	180101	O-ring	1
	55	3201860	Ring	1
	56	2760230	Fitting	1
	57	394280	O-ring	1
	58	2760270	O-ring	1
	59	1470210	O-ring	1
	60	2761550	Injector	1
	61	2760200	Spring	1
	62	2760130	Shutter	1
	63	1460430	O-ring	1
	64	1560520	Spring	1
	65	1250280	Ball	1
	66	480480	O-ring	1

Model 1450

Version:

Serial number:

Code: **26217**

02/03/2018

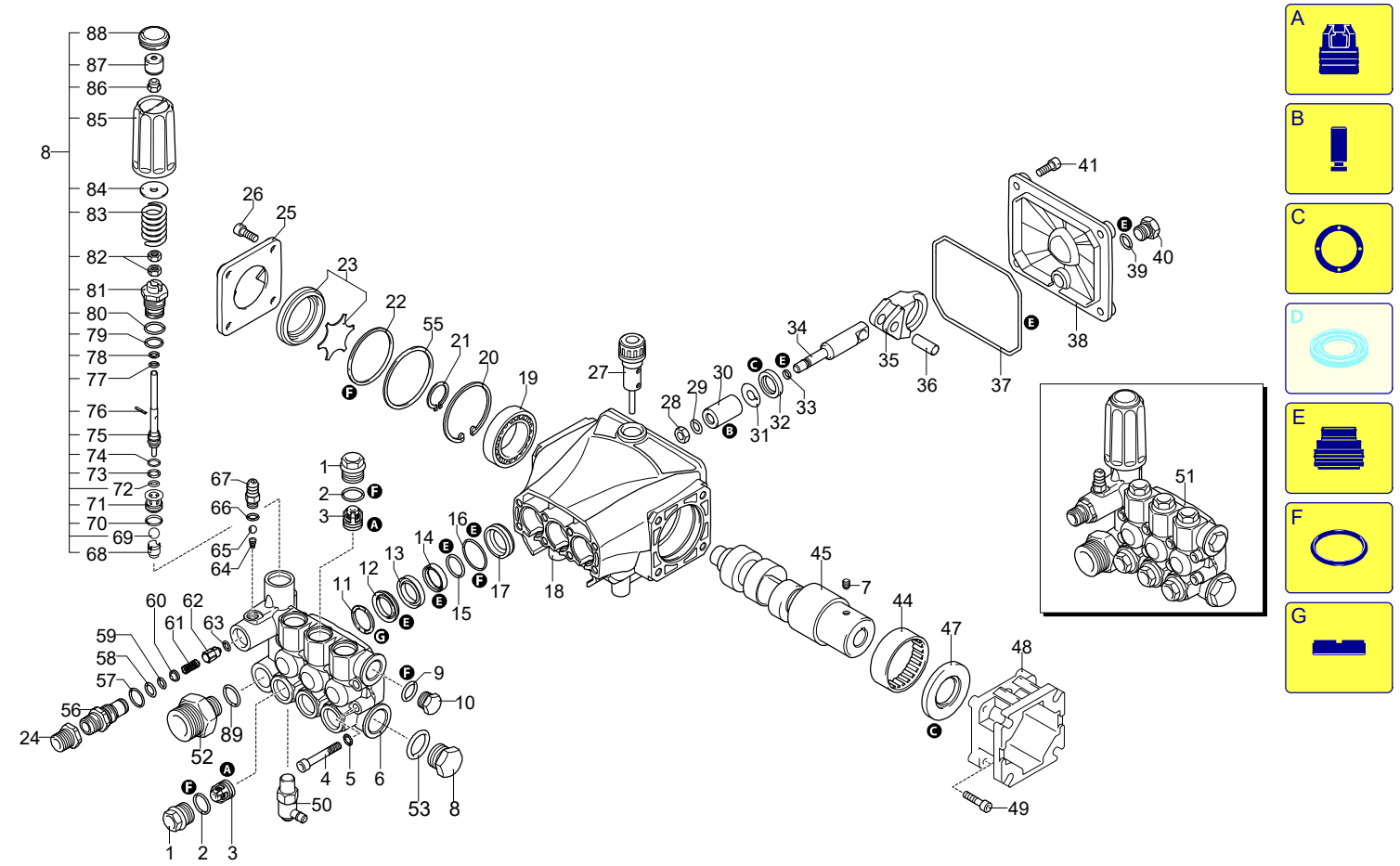

Validity	Pos.	Code	Description	Q
	67	1982520	Hose tail	1
	68	3200560	Guide	1
	69	3200590	Ball	1
	70	770140	O-ring	1
	71	3200550	Seat	1
	72	660191	O-ring	1
	73	1080401	Ring	1
	74	480560	O-ring	1
	75	3200510	Piston	1
	76	3201820	Pin	1
	77	770090	O-ring	1
	78	3200540	Ring	1
	79	394280	O-ring	1
	80	1200690	O-ring	1
	81	3200530	Piston guide	1
	82	1980300	Nut	2
	83	3201340	Spring	1
	84	3200600	Washer	1
	85	3200480	Knob	1
	86	3000170	Nut	1
	87	3200520	Bushing	1
	88	3200500	Plug	1
	89	2840890	O-ring	1
	A	2186	Valve kit	1
	B	42475	Piston kit	1
	C	42474	Oil seal kit	1
	E	42476	Water seal kit	1
	F	42470	Gasket kit	1
	G	2191	Support ring kit	1

Model 1450

Version:

Serial number:

Code: **26217**

02/03/2018

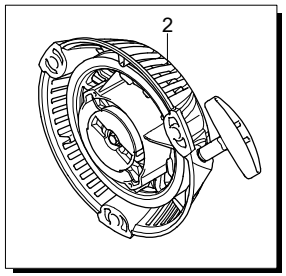

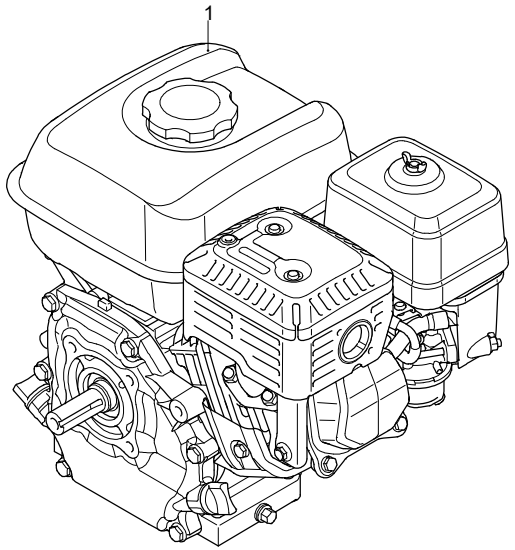

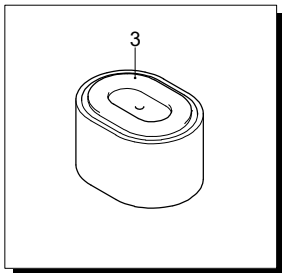

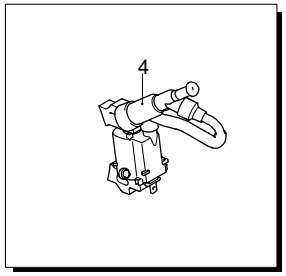

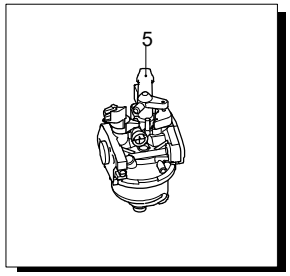

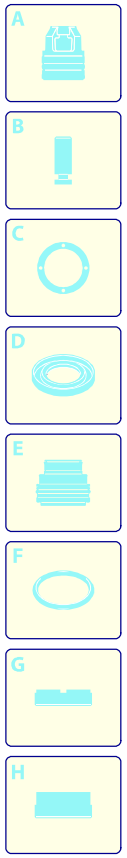

Validity	Pos.	Code	Description	Q
	1	44941	Motor	1
	2	51796	Start	1
	3	51795	Filter	1
	4	51803	Coil	1
	5	51802	Carburetor	1

UN_CE_2103-BN

Model 1450

Version:

Serial number:

Code: **26217**

02/03/2018

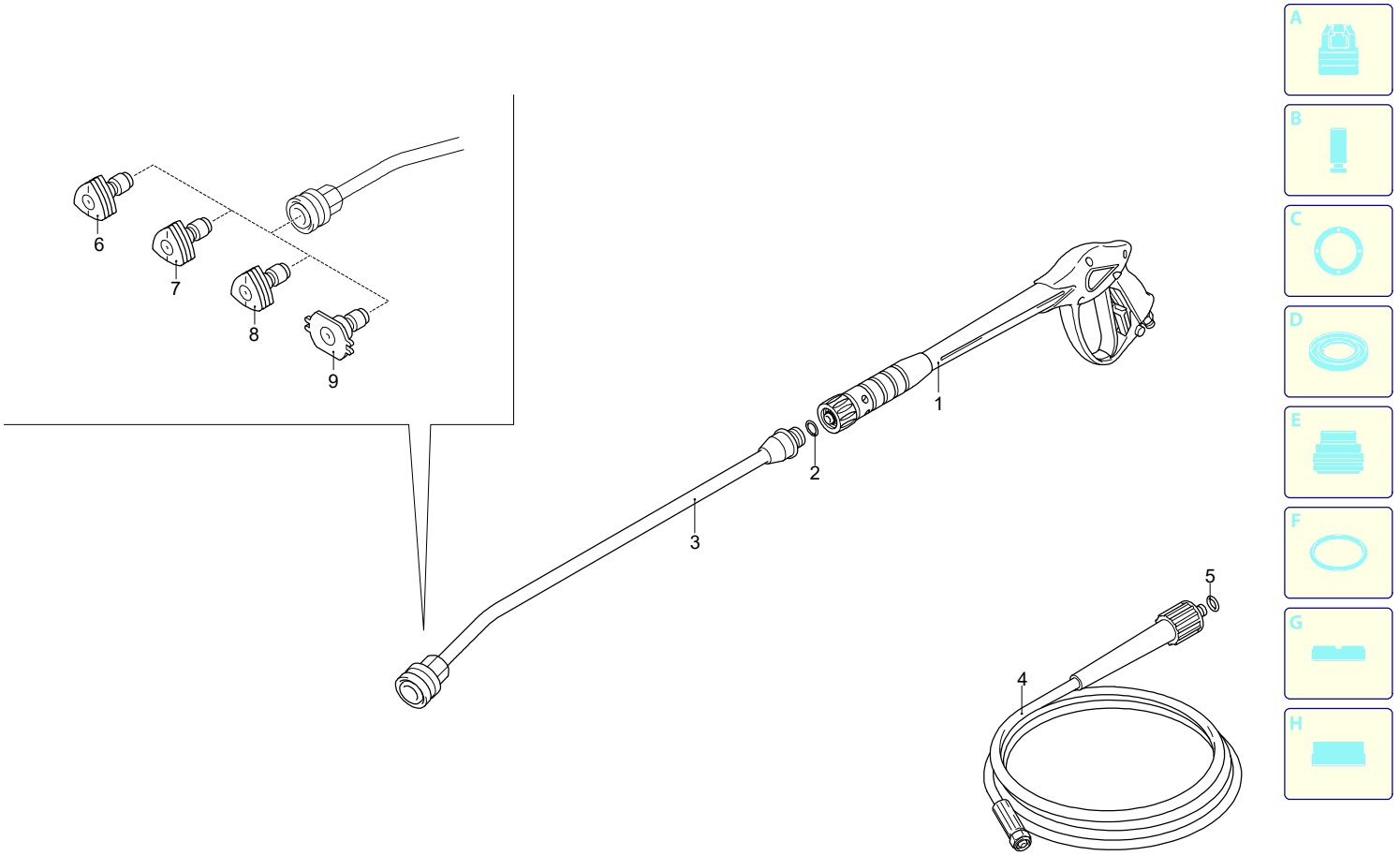

Validity	Pos.	Code	Description	Q
	1	43525	Gun	1
	2	391000	O-ring	1
	3	3600650	Lance	1
	4	3780443	High pressure hose	1
	5	2000570	O-ring	1
	6	3600930	Nozzle (0°)	1
	7	3600940	Nozzle (15°)	1
	8	3600960	Nozzle (40°)	1
	9	3600400	Nozzle (low pressure)	1

UN_CE_2096-BN