60.4800.00 VB140/160 unload. 3/4"F Bsp -brass

60.4800.50 VB140/160 unload. 3/4"F Npt

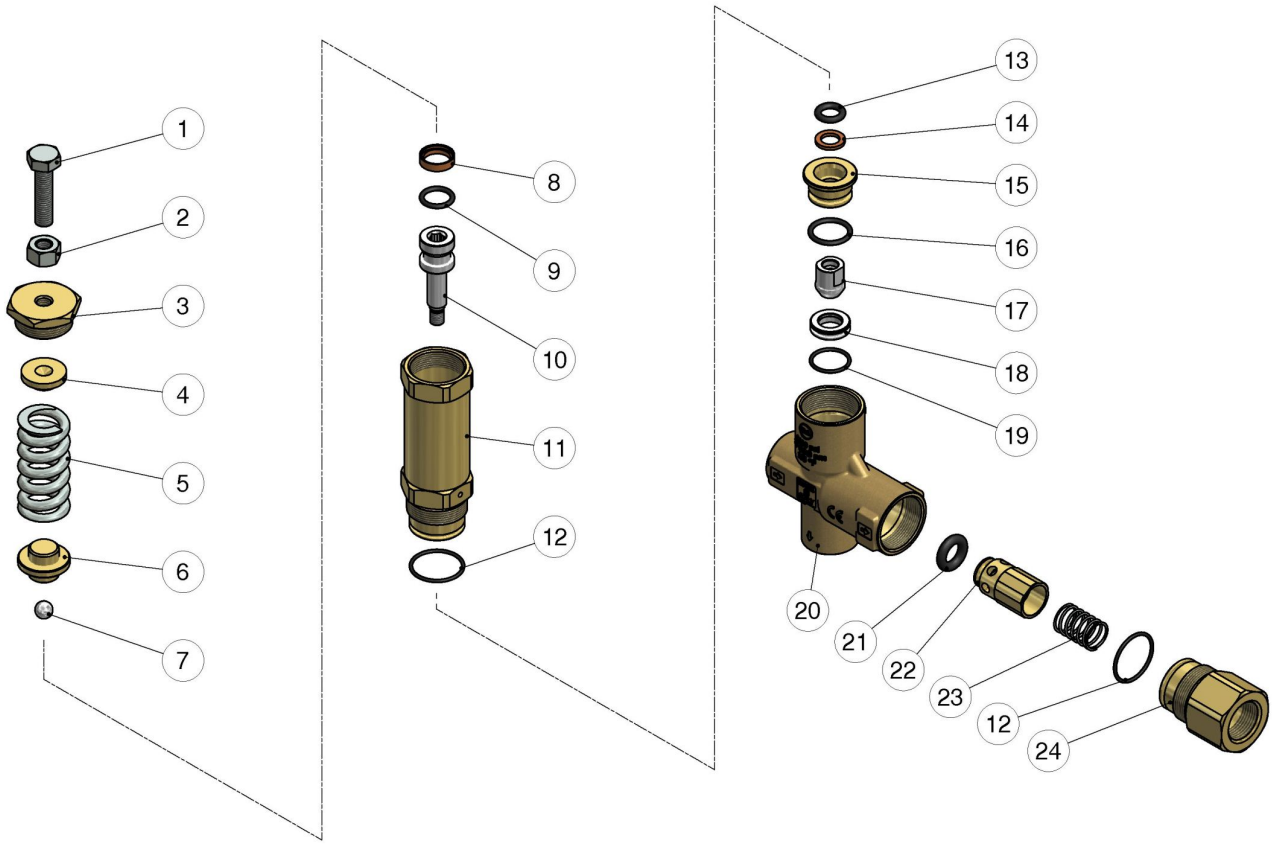

Pos.	P/N	Description	Q.ty	K1	K2	K3	K4	
1	60.5011.61R	Valve regulating screw, M10x44 z.pl.	1					10
2	11.4629.00R	Hex. nut, M10	1					10
3	60.5008.31R	Upper plug, M10 brass	1					10
4	60.5007.31R	Spring guide spacer, brass	1					10
5	60.5006.61R	Spring, 6x30x62 mm	1					5
6	60.4304.31R	Spring guide spacer, brass	1					2
7	14.7461.00R	Ball, 13/32" Sst.	1					10
8	10.4094.00R	Back-up ring, 15,5x20x5 mm	1	•				5
9	10.3180.00R	O-ring, 2,62x15,08 mm	1	•				10
10	60.4803.51R	Piston, M8 Sst.	1					2
11	60.4801.31R	Piston holder, brass	1					2
12	10.3077.08R	O-ring, 1,78x28,3 mm Ni 85	2	•				10
13	10.3234.00R	O-ring, 3,53x10,69 mm	1	•				10

Kit	P/N	Description	
K1	60.4812.24	Spares kit -VB140/160, 10x1pcs.	1

(1) 60.4800.00 (2) 60.4800.50

Pos.	P/N	Description	Q.ty	K1	K2	K3	K4	
14	10.4044.00R	Back-up ring, 11 x 17,2 x 2 mm	1	•				10
15	60.4807.31R	Reduction bushing, brass	1					2
16	10.3195.01R	O-ring, 2,62x20,29 mm Ni 90	1	•				10
17	60.4806.51R	Shutter pin, M8 Sst.	1	•				3
18	60.4804.51R	Seat, 14x23x6 mm Sst.	1	•				2
19	10.3072.01R	O-ring, 1,78x20,35 mm Ni 85	1	•				10
20	60.4805.35R	Housing-VB140/160, 3/4 Bsp F brass (1)	1					1
20	60.4808.35R	Housing-VB140/160, 3/4 Npt F brass (2)	1					1
21	10.3314.00R	O-ring, 5,33x12,06 mm	1	•				10
22	60.5012.99R	Shutter pin, brass+or 5,33x12,06 mm N	1					5
23	60.5013.51R	Spring, 1,3x18x29 mm Sst.	1					10
24	60.4802.31R	Coupling, 3/4"Bsp F brass (1)	1					3
24	60.4809.31R	Coupling, 3/4"Npt F brass (2)	1					3