40.0160.12 S6 lan.-RL600 sst 1200mm+grip

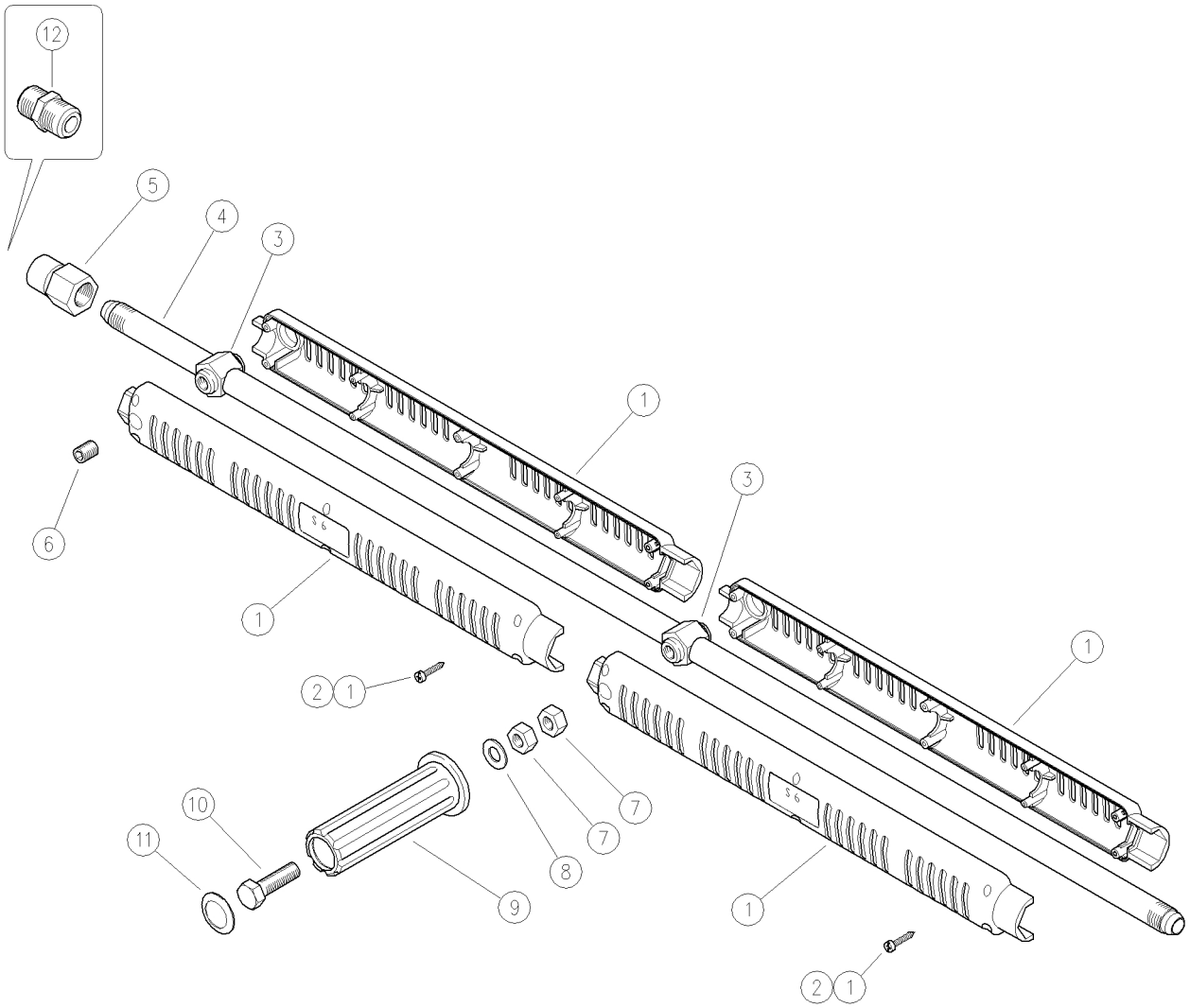

Pos.	P/N	Description	Q.ty	K1	K2	K3	K4	
1	40.0161.24	Casing-kit -S6 +screws, Sst.	2					1
2	16.3075.51R	S/tapping scr. 3,5x18 mm sst.	12					10
3	30.5885.31R	Tube fastener, brass	2					10
4	30.5886.569	Tube, 3/8Bsp MM 1200mm Sst.	1					1
5	30.5883.51R	Nozzle holder, 3/8F Bsp-1/4F Npt Sst.	1					5
6	16.2230.00R	Set screw, DIN916 M10x8 mm z.pl.	1					10

Pos.	P/N	Description	Q.ty	K1	K2	K3	K4	
7	11.4627.00R	Hex. nut, M10	2					10
8	14.3799.00R	Washer, 10x21x2 mm	1					10
9	41.0409.84R	Knob, 32x115 mm PP black	1					10
10	16.2030.00R	Screw, DIN933 M10x30 mm z.pl.	1					10
11	41.0411.84R	Plug, Knob PP black	1					10
12	13.5009.51R	Sst Nipple,. 1/4MM Bsp-Npt **	1					5

** On request