PA	EQUIPAGGIAMENTI TECNICI LAVAGGIO	ATTACCO RAPIDO A SFERA 220 BAR *BALL QUICK COUPLING 220 BAR* **ARS 220**	(I) (GB) 5 10/03/10

SPECIFICHE TECNICHE
SPECIFICATIONS

– PRESSIONE NOMINALE *RATED PRESSURE*	220 bar – 22 MPa (3200 psi)
– PRESSIONE CONSENTITA *PERMISSIBLE PRESSURE*	250 bar – 25 MPa (3650 psi)
– PORTATA MASSIMA *MAX FLOW RATE*	50 l/min (13.2 USG p.m.)
– TEMPERATURA MASSIMA *MAX WORKING TEMPERATURE*	90 °C (195 °F)

PERNO IN ACCIAIO NICHELATO E CORPO IN OTTONE NICHELATO CON GUARNIZIONI OR IN NBR

PIN IN NICKEL PLATED STEEL AND BODY IN NICKEL PLATED BRASS WITH NBR O RINGS

MISURE D'INGOMBRO
OVERALL DIMENSIONS

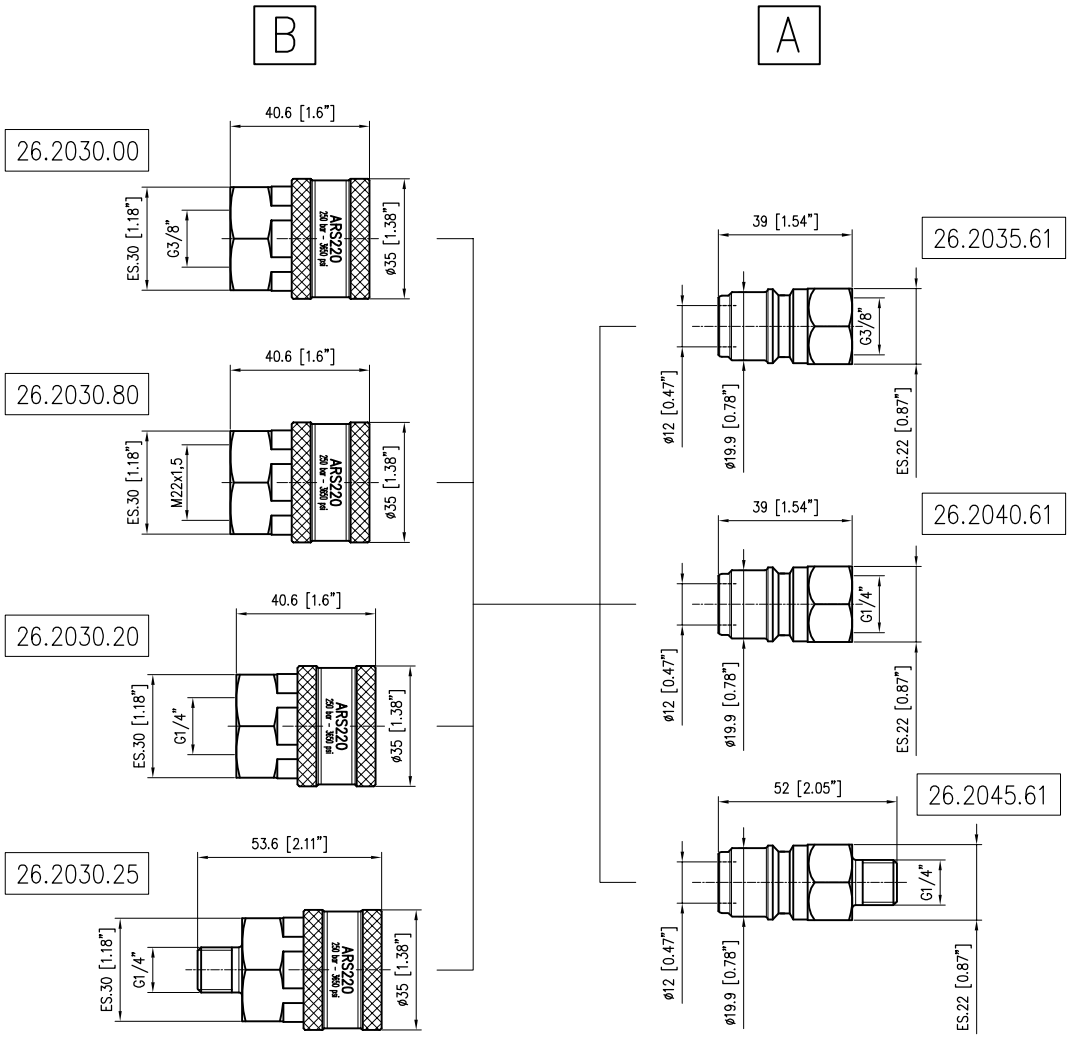

26.2030.00 ARS220 B att.rapido a sfera G3/8F
26.2030.20 ARS220 B att.rapido a sfera G1/4F
26.2030.25 ARS220 B att.rapido a sfera G1/4M
26.2030.80 ARS220 B att.rapido a sfera M22 F

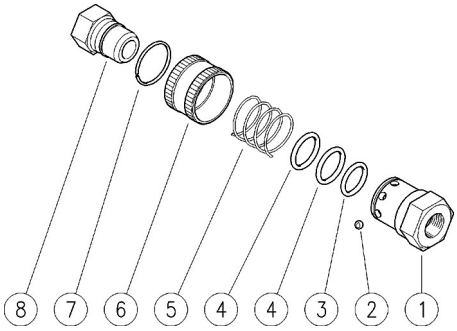

26.2035.61R ARS220 A nipplo a sfera, nich. G3/8F
26.2040.61R ARS220 A nipplo a sfera, nich. G1/4F
26.2045.61R ARS220 A nipplo a sfera, nich. G1/4M

Pos.	Codice	Descrizione	Q.tà	K1	K2	K3	K4	
1	26.2041.31R	Corpo ARS220 G1/4F (1)	1					5
1	26.2039.31R	Corpo ARS220 G1/4M (2)	1					5
1	26.2031.31R	Corpo ARS220 G3/8F (3)	1					5
1	26.2042.31R	Corpo ARS220 M22 F (4)	1					5
2	14.7410.10R	Sfera 3/16" inox (4)	8	•				10
3	10.3182.00R	An.OR 2,62x17,96 mm	1	•				10
4	10.3185.00R	An.OR 2,5x20 mm	2	•				10
5	26.2033.51R	Molla 1,4x29,1x25 mm inox	1					10
6	26.2032.31R	Ghiera ARS220	1					5
7	26.2034.51R	An. elast. 1,4x26 mm inox	1					3
8	26.2035.61R	ARS220 A nipplo a sfera, nich. G3/8F	1					25
8	26.2040.61R	ARS220 A nipplo a sfera, nich. G1/4F	1					25
8	26.2045.61R	ARS220 A nipplo a sfera, nich. G1/4M	1					25

Kit	Codice	Descrizione	
K1	26.2036.24	Kit ric. ARS220 3x10pz.	1

(1) 26.2030.20 (2) 26.2030.25 (3) 26.2030.00 (4) 26.2030.80

26.2030.00 ARS220 B ball-type coupler 3/8F Bsp
26.2030.20 ARS220 B ball-type coupler 1/4F Bsp
26.2030.25 ARS220 B ball-type coupler 1/4M Bsp
26.2030.80 ARS220 B ball-type coupler M22 F

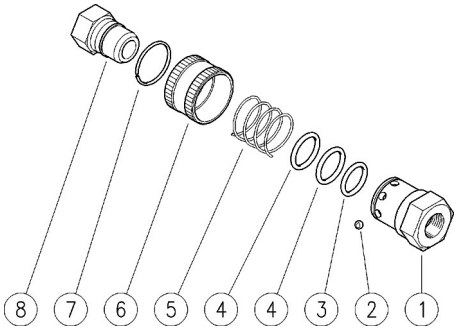

26.2035.61R ARS220 A ball-typ.nipp.nick.pl.,3/8F Bsp
26.2040.61R ARS220 A ball-typ.nipple,n.pl.,1/4FBsp
26.2045.61R ARS220 A ball-type nipple,nick.pl.,1/4M Bsp

Pos.	P/N	Description	Q.ty	K1	K2	K3	K4	
1	26.2041.31R	Housing -ARS220, 1/4F Bsp (1)	1					5
1	26.2039.31R	Housing -ARS220, 1/4M Bsp (2)	1					5
1	26.2031.31R	Housing -ARS220, 3/8F Bsp (3)	1					5
1	26.2042.31R	Housing -ARS220, M22 F (4)	1					5
2	14.7410.10R	Ball, 3/16" Sst. (4)	8	•				10
3	10.3182.00R	O-ring, 2,62x17,96 mm	1	•				10
4	10.3185.00R	O-ring, 2,5x20 mm	2	•				10
5	26.2033.51R	Spring, 1,4x29,1x25 mm Sst.	1					10
6	26.2032.31R	Ring nut, ARS220	1					5
7	26.2034.51R	Snap ring, 1,4x26 mm Sst.	1					3
8	26.2035.61R	ARS220 A ball-typ.nipp.nick.pl.,3/8F Bsp	1					25
8	26.2040.61R	ARS220 A ball-typ.nipple,n.pl.,1/4FBsp	1					25
8	26.2045.61R	ARS220 A ball-type nipple,nick.pl.,1/4M Bsp	1					25

Kit	P/N	Description	
K1	26.2036.24	Spares kit -ARS220 3x10pcs.	1

(1) 26.2030.20 (2) 26.2030.25 (3) 26.2030.00 (4) 26.2030.80