Model 1425

Version:

Serial number:

Code: **26215**

06/06/2017

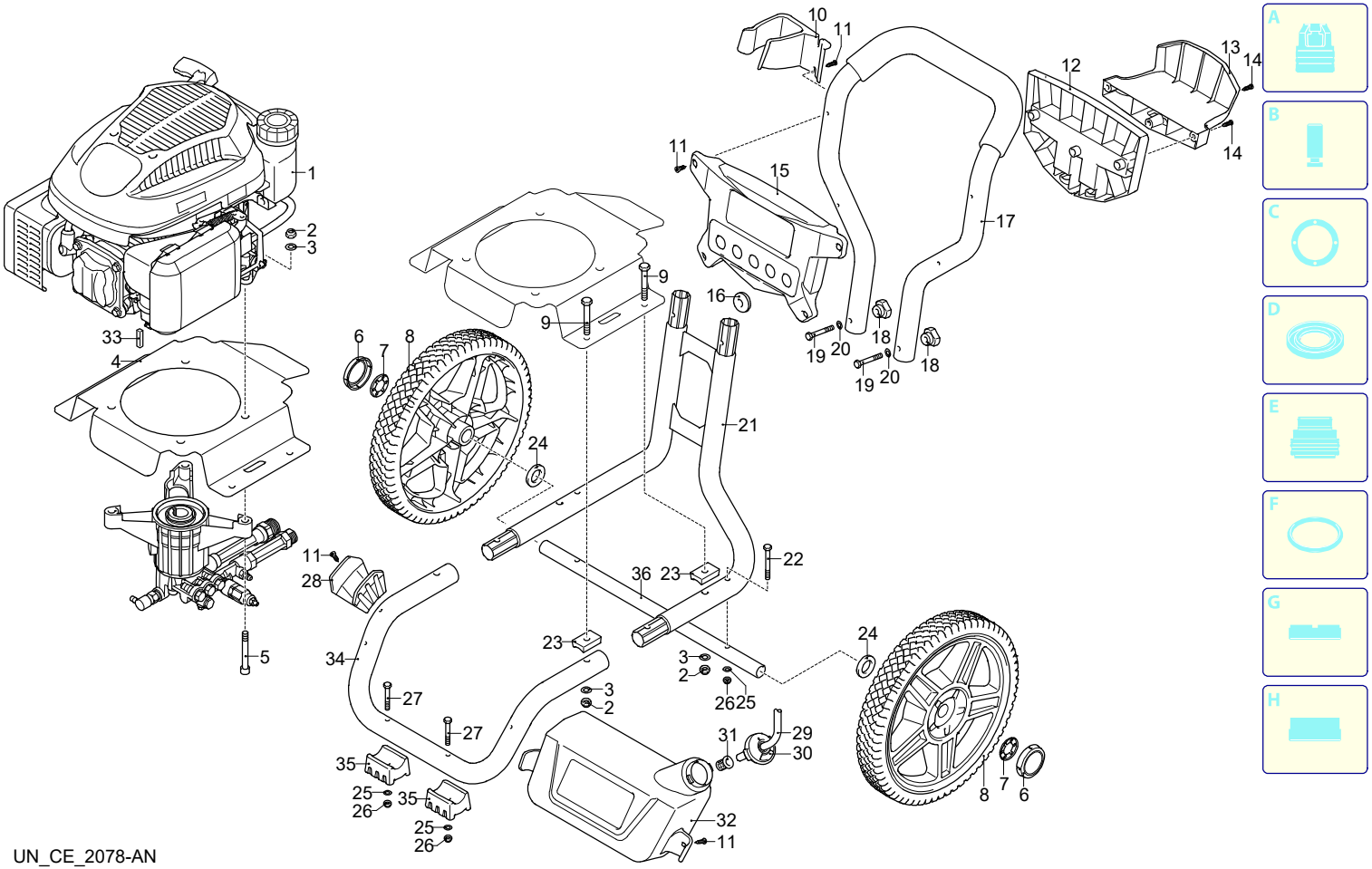

UN_CE_2078-AN

Validity	Pos.	Code	Description	Q
	1	44942	Motor	1
	2	160311	Nut	8
	3	390311	Washer	8
	4	4000020	Support	1
	5	1880310	Screw	4
	6	4000610	Cover	2
	7	380620	Washer	2
	8	4000320	Wheel	2
	9	3240281	Screw	4
	10	4000210	Accessories carrier	1
	11	2060200	Screw	8
	12	4000230	Guard	1
	13	4000260	Accessories carrier	1
	14	2100300	Screw	3
	15	4000220	Support	1
	16	4000790	Nozzle holder	5
	17	4000060	Handle	1
	18	50019	Knob	2
	19	4000360	Screw	2
	20	4000860	Washer	2
	21	4000010	Frame	1
	22	4000830	Screw	2
	23	4000350	Spacer	4
	24	4000780	Spacer	2
	25	550331	Washer	4
	26	3000170	Nut	4
	27	4000370	Screw	2
	28	4000240	Accessories carrier	1
	29	1270960	Detergent hose	1
	30	4000750	Plug	1
	31	2000230	Filter	1
	32	4000160	Tank	1
	33	621390	Key	1
	34	4000040	Frame	1
	35	4000400	Foot	2
	36	4000120	Axle	1

Model 1425

Version:

Serial number:

Code: **26215**

06/06/2017

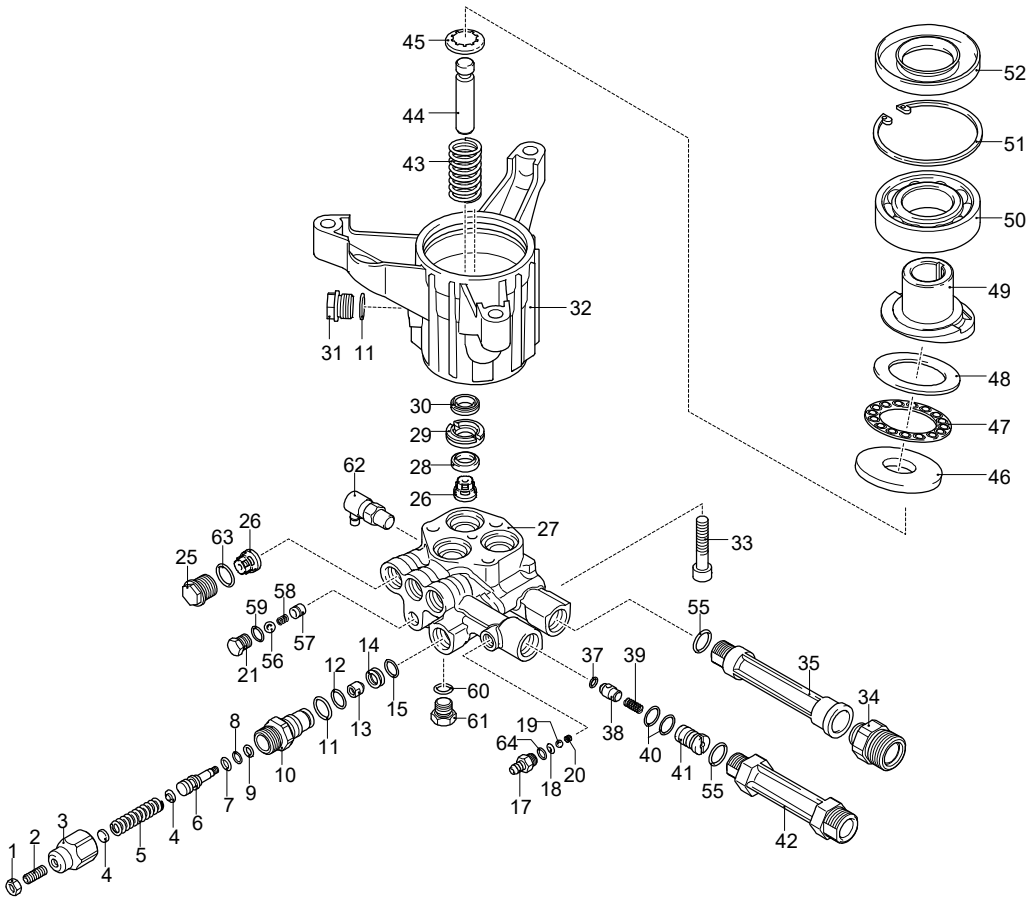

UN_CE_2079-AN

Validity	Pos.	Code	Description	Q
	1	1060120	Nut	1
	2	392840	Screw	1
	3	2760480	Insert	1
	4	1980220	Wobble plate	2
	5	2760410	Spring	1
	6	2841140	Piston	1
	7	2260100	O-ring	1
	8	660190	O-ring	1
	9	2760210	Ring	1
	10	2840750	Piston guide	1
	11	740290	O-ring	2
	12	820510	O-ring	1
	13	2840760	Shutter	1
	14	2840770	Seat	1
	15	1470210	O-ring	1
	17	3700240	Hose tail	1
	18	480480	O-ring	1
	19	1250280	Ball	1
	20	1560520	Spring	1
	21	2840830	Screw	1
	25	2841530	Plug	3
	26	2849051	Complete valve	6
	27	2841731	Head	1
	28	2200141	Water seal	3
	29	2840561	Bushing	3
	30	1683500	Oil seal	3
	31	2841240	Plug	1
	32	2840520	Pump body	1
	33	380410	Screw	3
	34	2841070	Fitting	1
	35	2842450	Fitting	1
	37	1460431	O-ring	1
	38	3700220	Valve	1
	39	3700210	Spring	1
	40	800560	O-ring	2
	41	3700200	Injector	1
	42	2840260	Fitting	1
	43	2840060	Spring	3
	44	2840040	Piston	3
	45	2840050	Lock	3
	46	1980130	Fifth wheel	1
	47	1980250	Fifth wheel	1
	48	1980240	Fifth wheel	1
	49	2840690	Wobble plate	1
	50	161060	Bearing	1
	51	161050	Ring	1
	52	2840310	Ring	1
	55	2840890	O-ring	3
	56	1060100	Ball	1
	57	2840440	Seat	1
	58	2840450	Spring	1
	59	600180	O-ring	1
	60	480650	Washer	1
	61	2840840	Plug	1
	62	2761380	Valve	3
	63	2841520	O-ring	1
	64	1681420	O-ring	1

Model 1425

Version:

Serial number:

Code: **26215**

06/06/2017

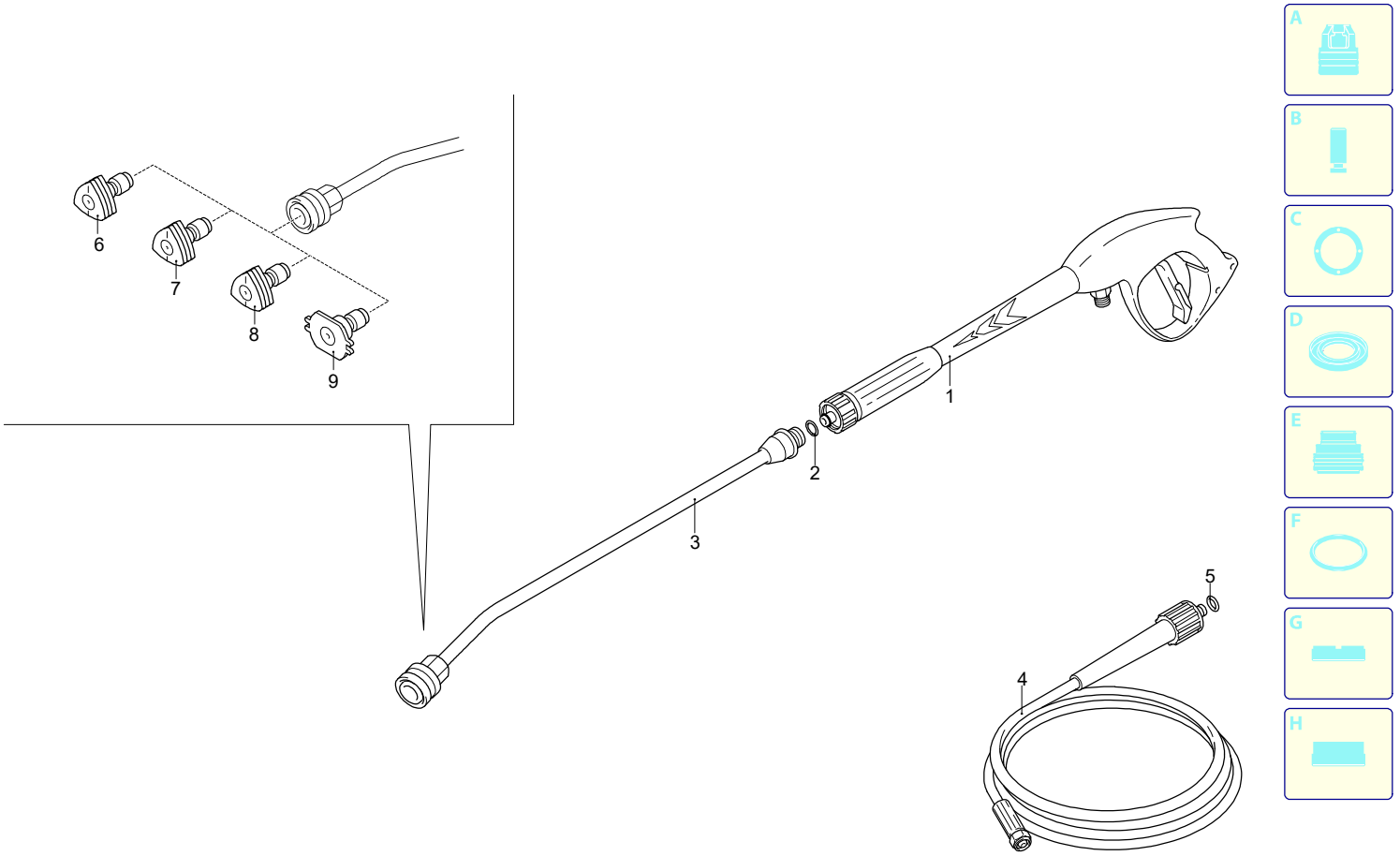

Validity	Pos.	Code	Description	Q
	1	40925	Gun	1
	2	391000	O-ring	1
	3	3600650	Lance	1
	4	3780492	High pressure hose	1
	5	2000570	O-ring	1
	6	3600920	Nozzle (40°)	1
	7	3600890	Nozzle (0°)	1
	8	3600900	Nozzle (15°)	1
	9	3600400	Nozzle (low pressure)	1

UN_CE_2077-AN