Model 1415

Version:

Serial number:

Code: **26213**

17/11/2017

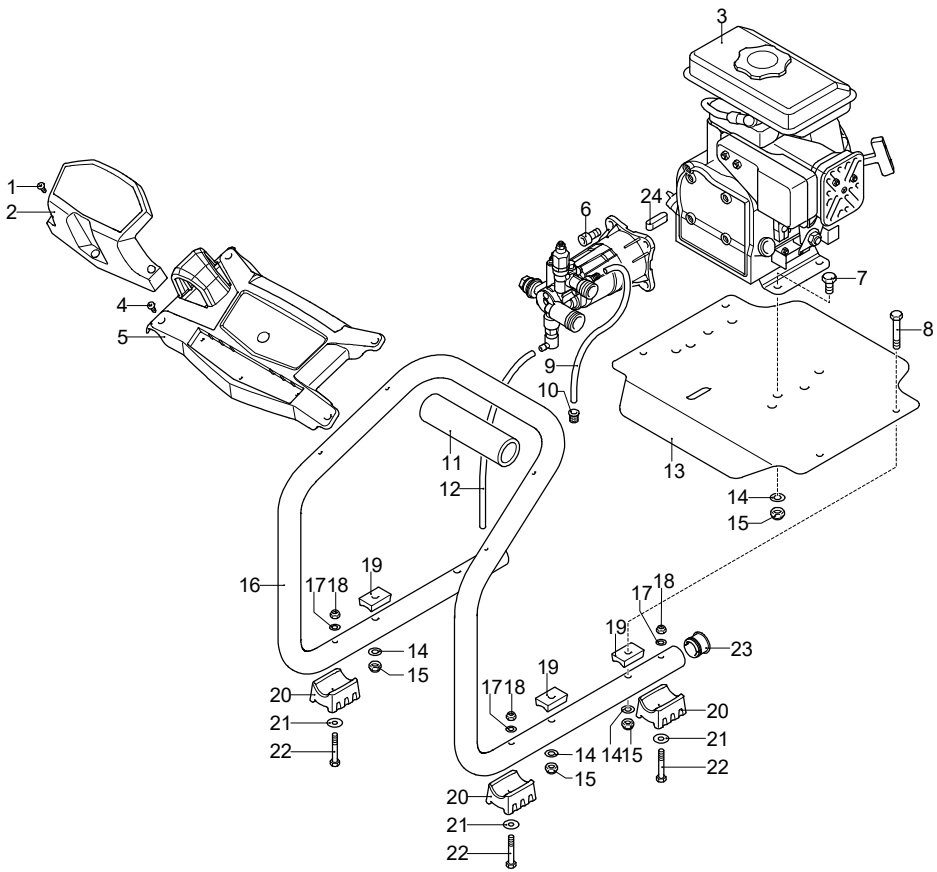

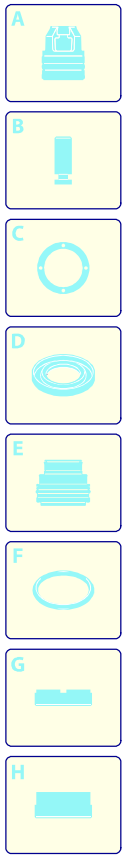

Validity	Pos.	Code	Description	Q
	1	2100300	Screw	4
	2	4000260	Accessories carrier	1
	3	44984	Motor	1
	4	2060200	Screw	4
	5	4000430	Accessories carrier	1
	6	180030	Screw	4
	7	180431	Screw	4
	8	1520840	Screw	4
	9	1262790	Detergent hose	1
	10	2000230	Filter	1
	11	4000810	Knob	1
	12	1700140	Detergent hose	1
	13	4000420	Support	1
	14	390311	Washer	8
	15	160311	Nut	8
	16	4000410	Frame	1
	17	550331	Washer	4
	18	3000170	Nut	4
	19	4000350	Spacer	4
	20	4000400	Foot	4
	21	3163290	Washer	4
	22	4000390	Screw	4
	23	4000880	Plug	2
	24	4000760	Key	1

UN_CE_2290-JN

Model 1415

Version:

Serial number:

Code: **26213**

17/11/2017

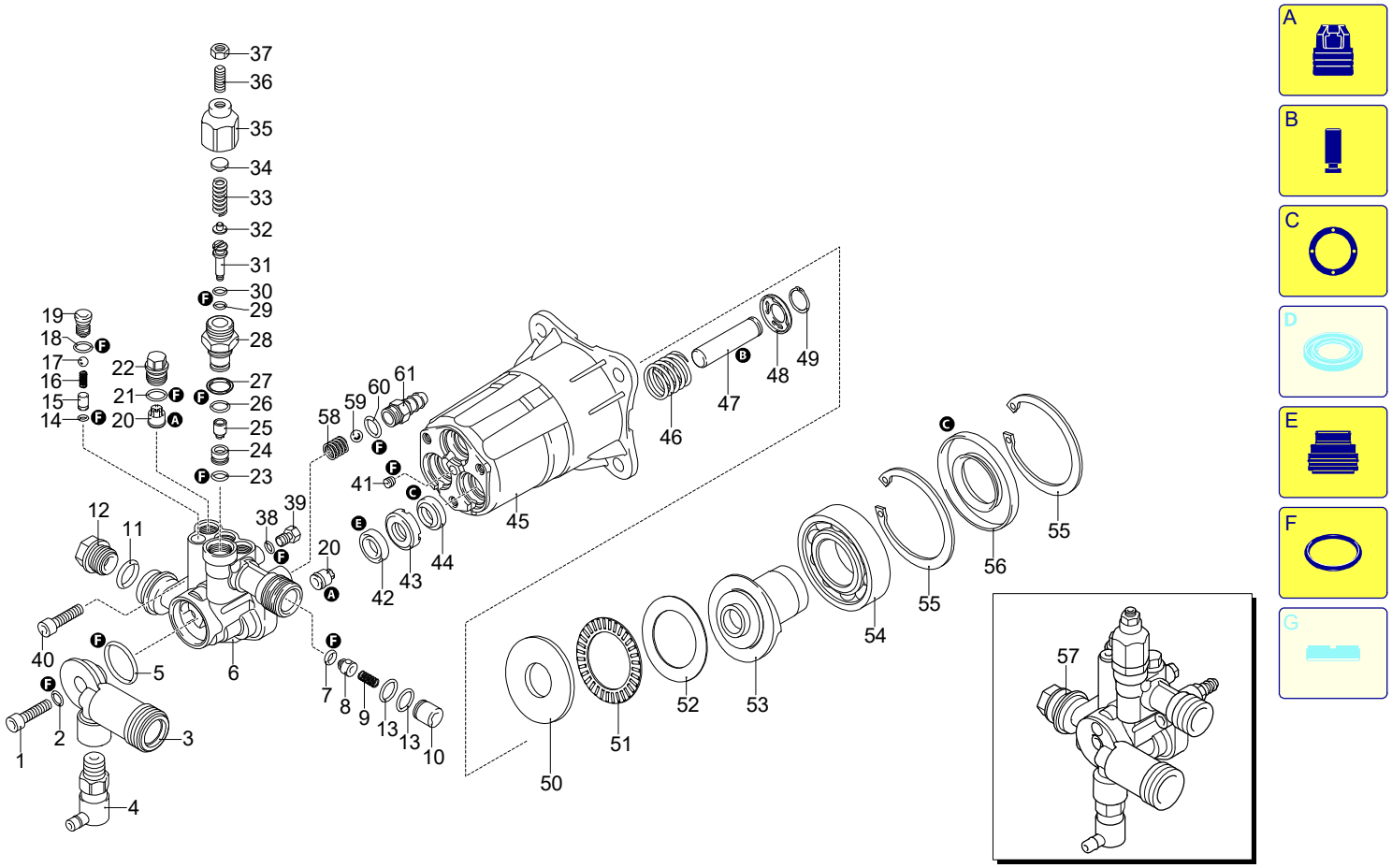

Validity	Pos.	Code	Description	Q
	1	780060	Screw	1
	2	480480	O-ring	1
	3	2820830	Plug	1
	4	2761380	Valve	1
	5	770260	O-ring	1
	6	3820790	Head	1
	7	2560870	O-ring	1
	8	2101201	Valve	1
	9	1343581	Spring	1
	10	2101740	Injector	1
	11	740290	O-ring	1
	12	2841240	Plug	1
	13	880840	O-ring	2
	14	3720750	O-ring	1
	15	3720740	Seat	1
	16	3720760	Spring	1
	17	1982240	Ball	1
	18	1682800	O-ring	1
	19	3820290	Plug	1
	20	3829050	Valve	6
	21	880840	O-ring	3
	22	3820051	Plug	3
	23	660190	O-ring	1
	24	3820370	Seat	1
	25	3820360	Piston	1
	26	1121160	O-ring	1
	27	394280	O-ring	1
	28	3820350	Piston guide	1
	29	2102640	O-ring	1
	30	2560870	O-ring	1
	31	3820340	Piston	1
	32	3820330	Wobble plate	1
	33	3820390	Spring	1
	34	1980220	Wobble plate	1
	35	3820380	Insert	1
	36	1540560	Screw	1
	37	1060120	Nut	1
	38	3201760	O-ring	1
	39	3720720	Plug	1
	40	780060	Screw	3
	41	3820310	Plug	1
	42	2841910	Water seal	3
	43	3820230	Bushing	3
	44	1683500	Oil seal	3
	45	3820010	Pump body	1
	46	3820300	Spring	3
	47	3820062	Piston	3
	48	3820132	Wobble plate	3
	49	3720390	Ring	3
	50	3820110	Fifth wheel	1
	51	3820100	Fifth wheel	1
	52	3820090	Fifth wheel	1
	53	3820080	Wobble plate	1
	54	200380	Bearing	1
	55	200390	Ring	2
	56	3820070	Ring	1
	57	3829204	Head assembly	1
	58	1560520	Spring	1
	59	1250280	Ball	1
	60	480480	O-ring	1
	61	3700240	Hose tail	1
	A	43025	Valve kit	1

Model 1415

Version:

Serial number:

Code: **26213**

17/11/2017

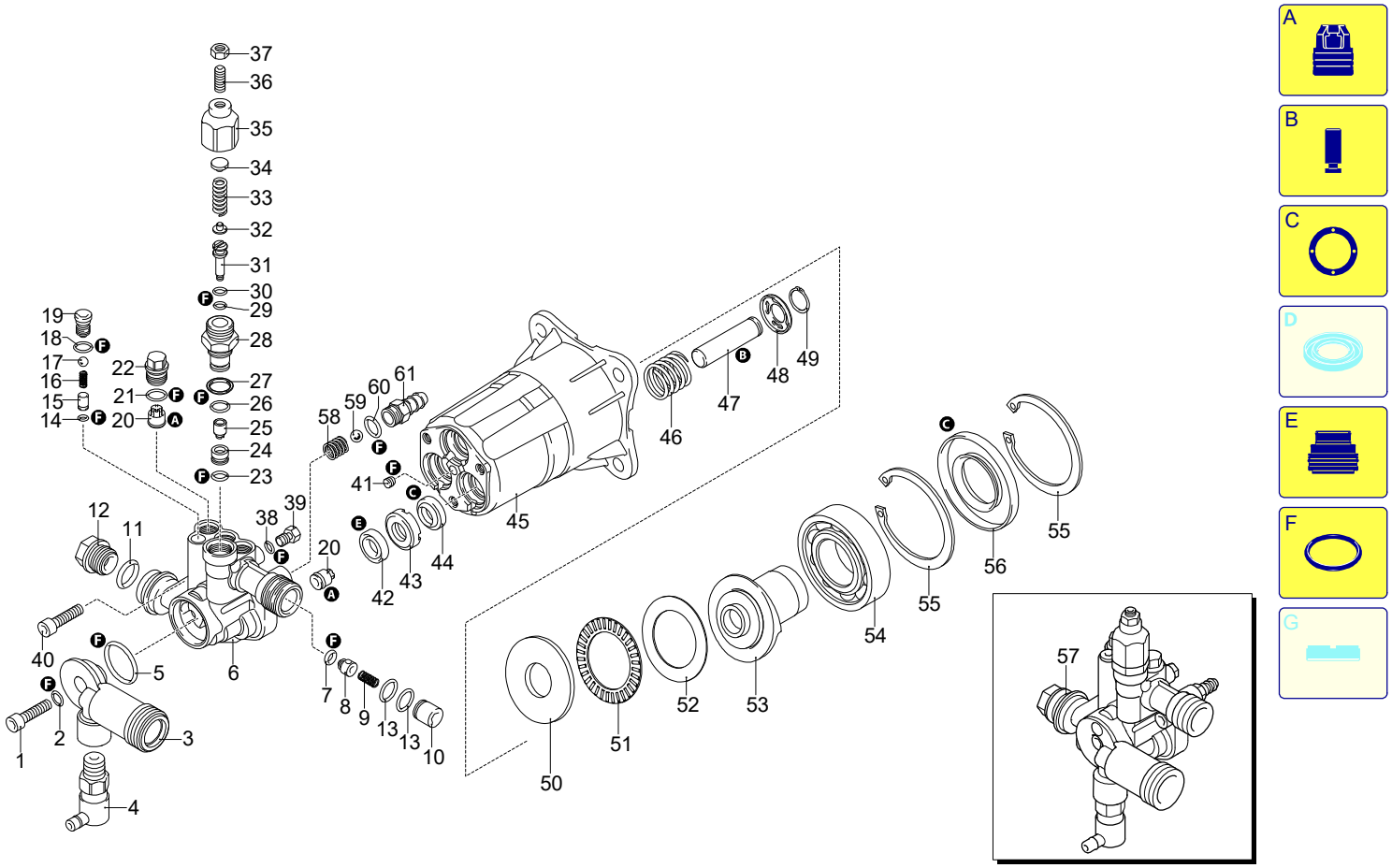

UN_CE_2297-KN

Validity	Pos.	Code	Description	Q
	B	43026	Piston kit	1
	C	43027	Oil seal kit	1
	E	43028	Water seal kit	1
	F	43029	Gasket kit	1

Model 1415

Version:

Serial number:

Code: **26213**

17/11/2017

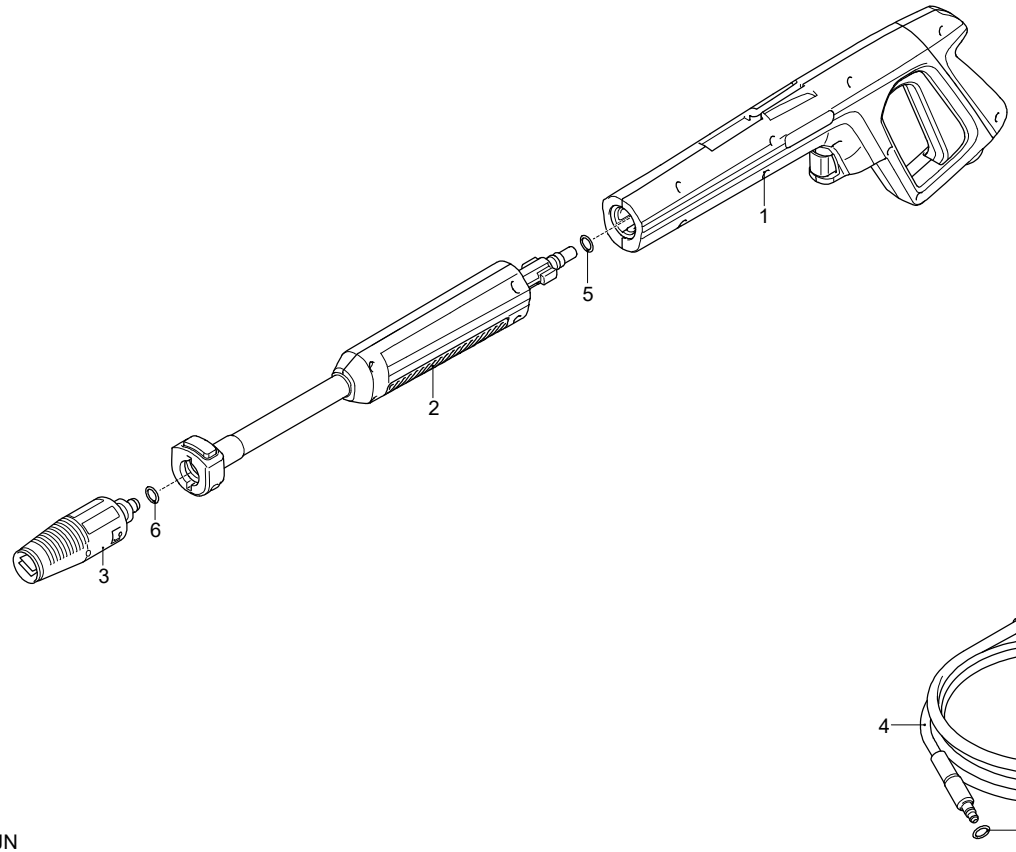

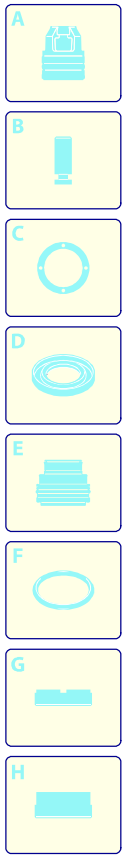

Validity	Pos.	Code	Description	Q
	1	4381482	Gun	1
	2	4381492	Extension	1
	3	4381820	Lance head	1
	4	4000760	Key	1
	5	3083700	O-ring	1
	6	3083370	O-ring	1
	7	3083380	O-ring	1
	8	3083400	O-ring	1

UN_CE_2291-JN