Model 1380-N

Version:

Serial number:

Code: **25284**

26/04/2018

400 V - 50 Hz

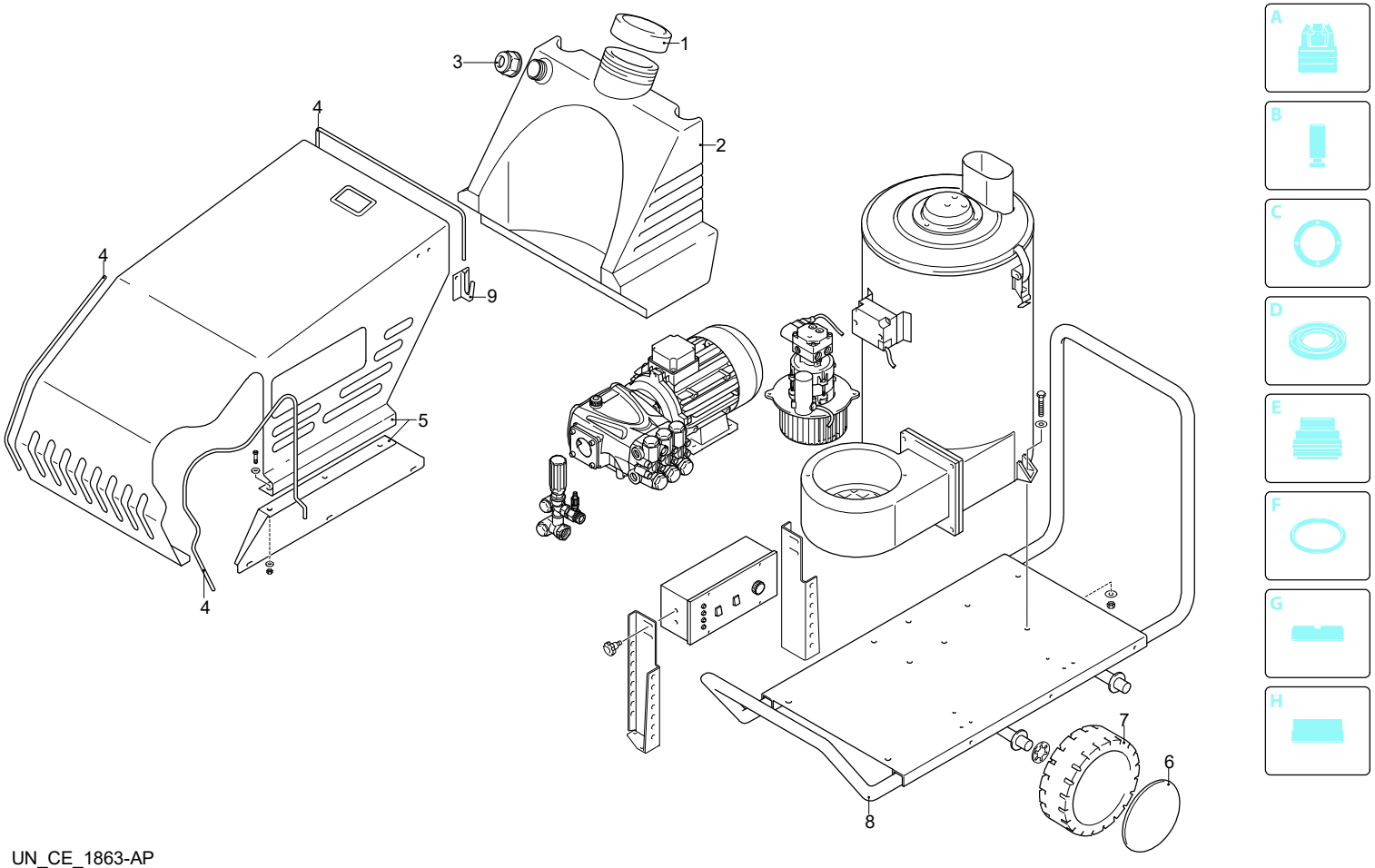

Validity	Pos.	Code	Description	Q
	1	50611	Plug	1
	2	51421	Tank	1
	3	51443	Plug	1
	4	50601	Gasket	1
	5	51429	Casing	1
	6	50628	Guard	4
	7	50627	Wheel	4
	8	51417	Frame	1
	9	51420	Accessories carrier	1

UN_CE_1863-AP

Model 1380-N

Version:

Serial number:

Code: **25284**

26/04/2018

400 V - 50 Hz

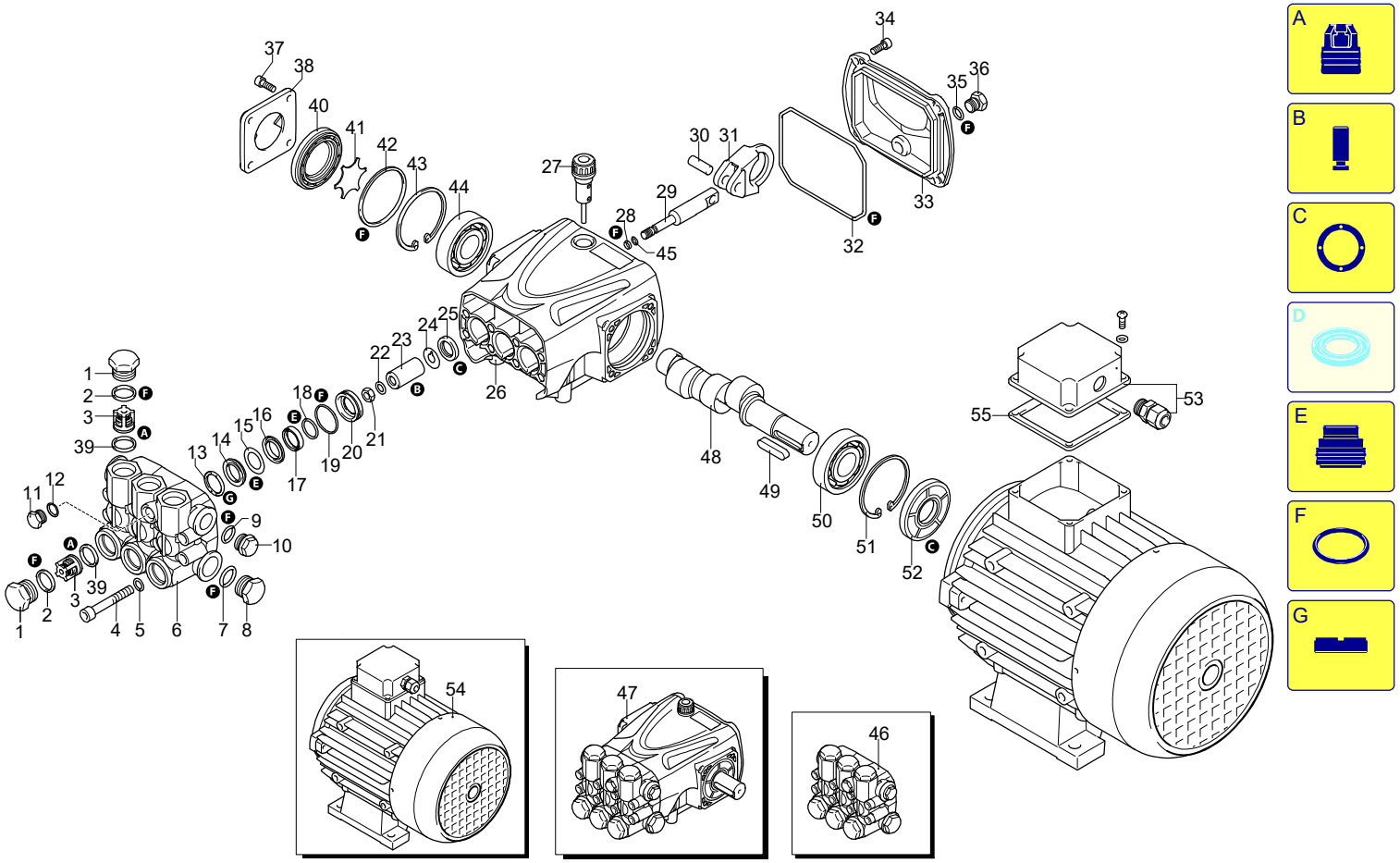

UN_CE_1864-AP

Validity	Pos.	Code	Description	Q
	1	960090	Plug	6
	2	960160	O-ring	6
	3	1389051	Complete valve	6
	4	800860	Screw	8
	5	1381850	Washer	8
	6	3220020	Head	1
	7	180101	O-ring	1
	8	820361	Plug	1
	9	740290	O-ring	1
	10	1980740	Plug	1
	11	880581	Plug	1
	12	820510	O-ring	1
	13	1780140	Ring	3
	14	1780720	Water seal	3
	15	3200250	Ring	3
	16	3220130	Piston guide	3
	17	3200142	Gasket	3
	18	3200260	Ring	3
	19	770260	O-ring	3
	20	3220120	Piston guide	3
	21	1260110	Nut	3
	22	1260100	Washer	3
	23	1780080	Piston	3
	24	1260091	Plate	3
	25	1260460	Oil seal	3
	26	3220010	Pump body	1
	27	880130	Plug	1
	28	480480	O-ring	3
	29	3220060	Piston	3
	30	3220070	Pin	3
	31	3220040	Connecting-rod	3
	32	651540	O-ring	1
	33	3220030	Cover	1
	34	3200220	Screw	4
	35	820510	O-ring	1
	36	880581	Plug	1
	37	1200430	Screw	4
	38	3200070	Support	1
	39	880830	O-ring	1
	40	3220080	Level gauge	1
	41	3200090	Plate	1
	42	650560	O-ring	1
	43	200390	Ring	1
	44	1981210	Bearing	1
	45	1080550	Ring	3
	46	3229200	Head assembly	1
	47	23507	Pump	1
	48	3220310	Shaft	1
	49	3200230	Key	1
	50	1981210	Bearing	1
	51	200390	Ring	1
	52	3220280	Ring	1
	53	51069	Box	1
	54	44275	Motor	1
	55	50068	Gasket	1
	A	2864	Valve kit	1
	B	2746	Piston kit	1
	C	42547	Oil seal kit	1
	E	42549	Water seal kit	1
	F	42550	Gasket kit	1
	G	2745	Support ring kit	1

Model 1380-N

Version:

Serial number:

Code: **25284**

26/04/2018

400 V - 50 Hz

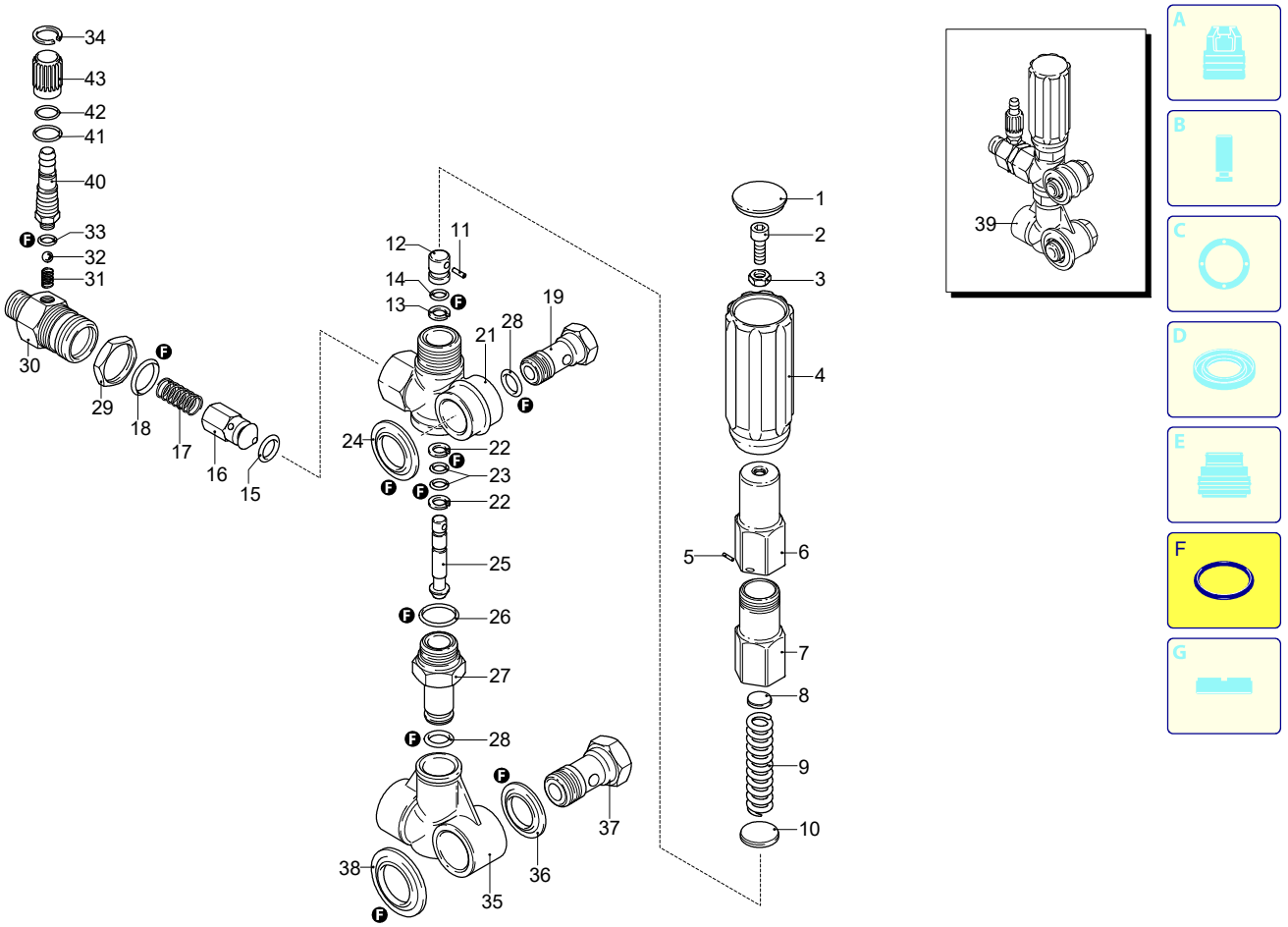

Validity	Pos.	Code	Description	Q
	1	1560580	Plug	1
	2	540290	Screw	1
	3	1660210	Nut	1
	4	1560400	Knob	1
	5	1080070	Pin	1
	6	1560420	Screw	1
	7	1560410	Guide	1
	8	1560440	Wobble plate	1
	9	1560350	Spring	1
	10	1080610	Wobble plate	1
	11	1080660	Pin	1
	12	1080540	Piston	1
	13	391000	O-ring	1
	14	1080640	Ring	1
	15	1560150	O-ring	1
	16	1560100	Shutter	1
	17	1560140	Spring	1
	18	180101	O-ring	1
	19	1540272	Screw	1
	21	1560010	Valve body	1
	22	1080550	Ring	2
	23	480480	O-ring	2
	24	1560280	Washer	1
	25	1560320	Piston	1
	26	880270	O-ring	1
	27	1560051	Fitting	1
	28	390080	O-ring	2
	29	1560510	Nut	1
	30	1560530	Fitting	1
	31	1560520	Spring	1
	32	1250280	Ball	1
	33	480480	O-ring	1
	34	1560660	Ring	1
	35	1540020	Suction fitting	1
	36	1540120	Washer	1
	37	1540090	Fitting	1
	38	1560290	Washer	1
	39	20400	Complete valve	1
	40	1560650	Hose tail	1
	41	800560	O-ring	1
	42	480560	O-ring	1
	43	1560670	Knob	1
	F	2611	Gasket kit	1

UN_CE_1200-MT

Model 1380-N

Version:

Serial number:

Code: **25284**

26/04/2018

400 V - 50 Hz

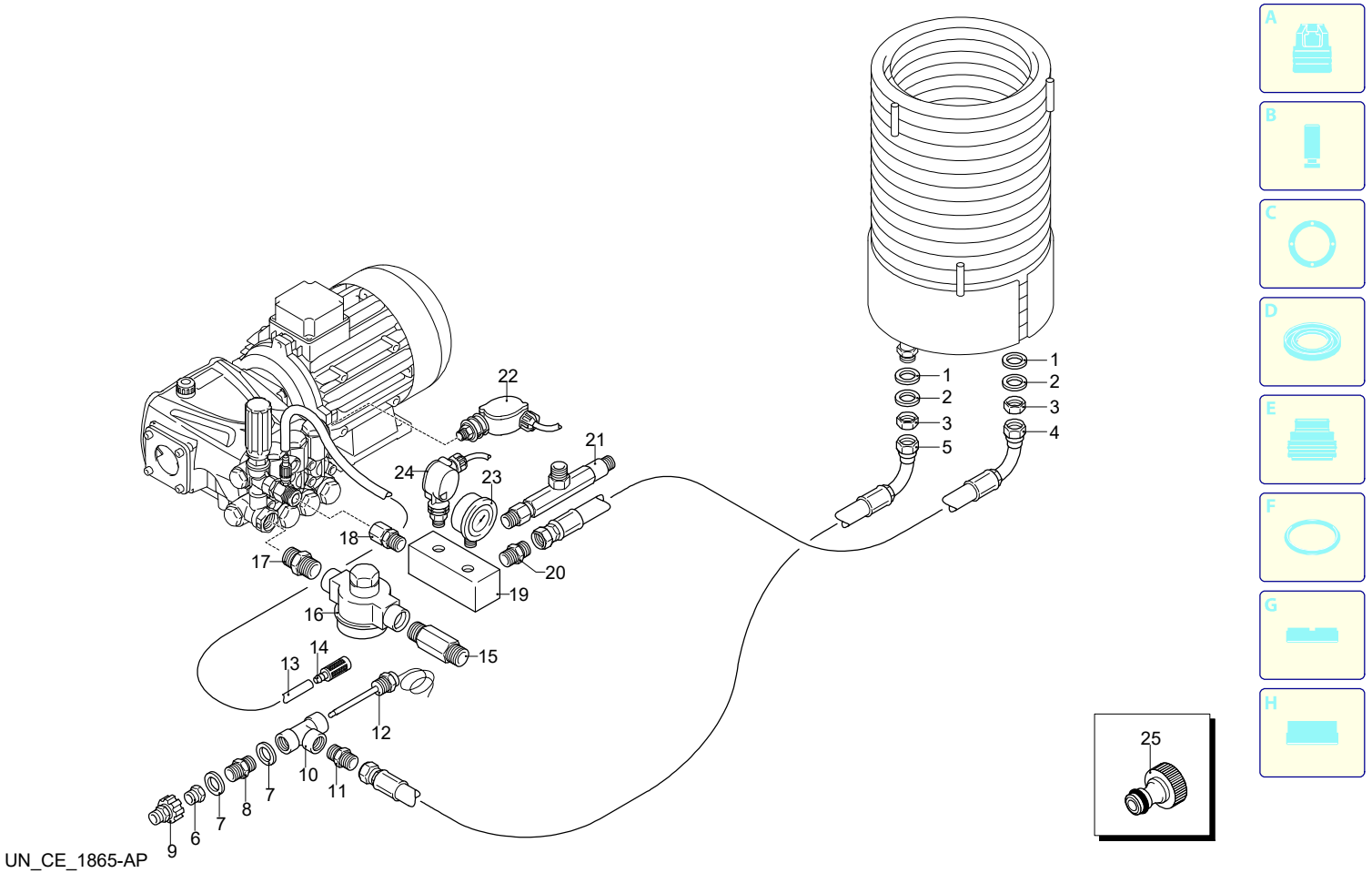

UN_CE_1865-AP

Validity	Pos.	Code	Description	Q
	1	50514	Washer	1
	2	50541	Washer	1
	3	50527	Nut	1
	4	51415	Pipe	2
	5	3260310	High pressure hose	1
	6	50481	Fitting	1
	7	50517	Washer	2
	8	50463	Fitting	1
	9	50480	Fitting	1
	10	50461	Fitting	1
	11	50463	Fitting	1
	12	50322	Thermostat	1
	13	50607	Pipe	1
	14	1341030	Filter	1
	15	1560600	Fitting	1
	16	30000	Filter	1
	17	50488	Fitting	1
	18	50466	Fitting	1
	19	51416	Support	1
	20	50467	Fitting	1
	21	3260110	Safety valve	1
	22	51425	Pressure switch	1
	23	51426	Pressure gauge	1
	24	3260510	Pressure switch	1
	25	50469	Hose tail	1

Model 1380-N

Version:

Serial number:

Code: **25284**

26/04/2018

400 V - 50 Hz

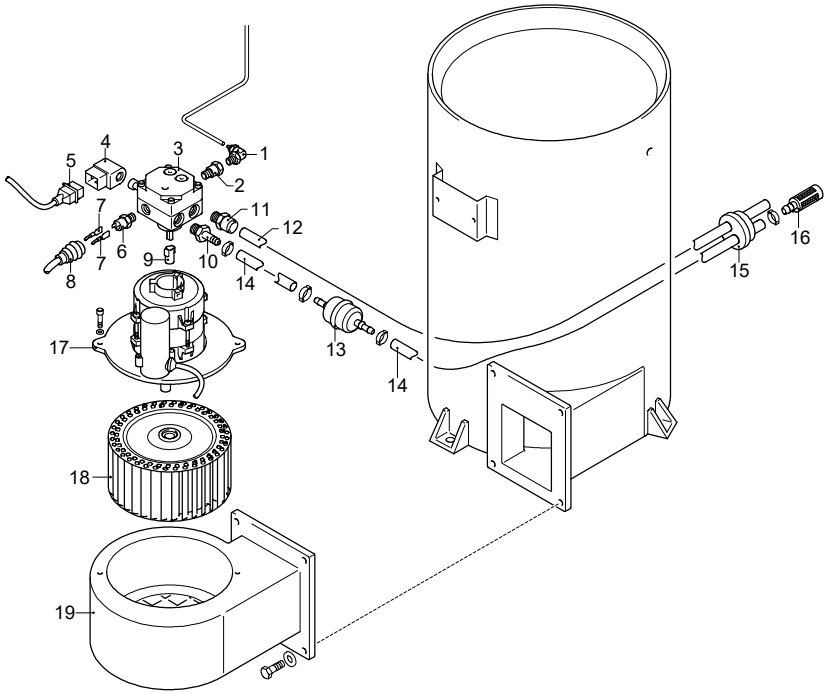

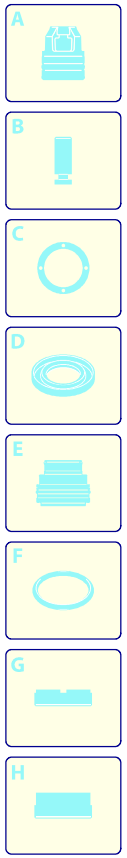

Validity	Pos.	Code	Description	Q
	1	50751	Fitting	1
	2	50468	Fitting	1
	3	3160310	Pump	1
	4	3160320	Solenoid	1
	5	3161440	Cable	1
	6	3260050	Pressure switch	1
	7	3260370	Connector	1
	8	3260380	Guard	1
	9	3160300	Coupling	1
	10	50491	Hose tail	1
	11	50464	Fitting	1
	12	50603	Pipe	1
	13	50747	Filter	1
	14	50608	Pipe	1
	15	50595	Plug	1
	16	1341030	Filter	1
	17	50647	Motor	1
	18	50584	Fan	1
	19	50590	Casing	1

UN_CE_1161-LT

Model 1380-N

Version:

Serial number:

Code: **25284**

26/04/2018

400 V - 50 Hz

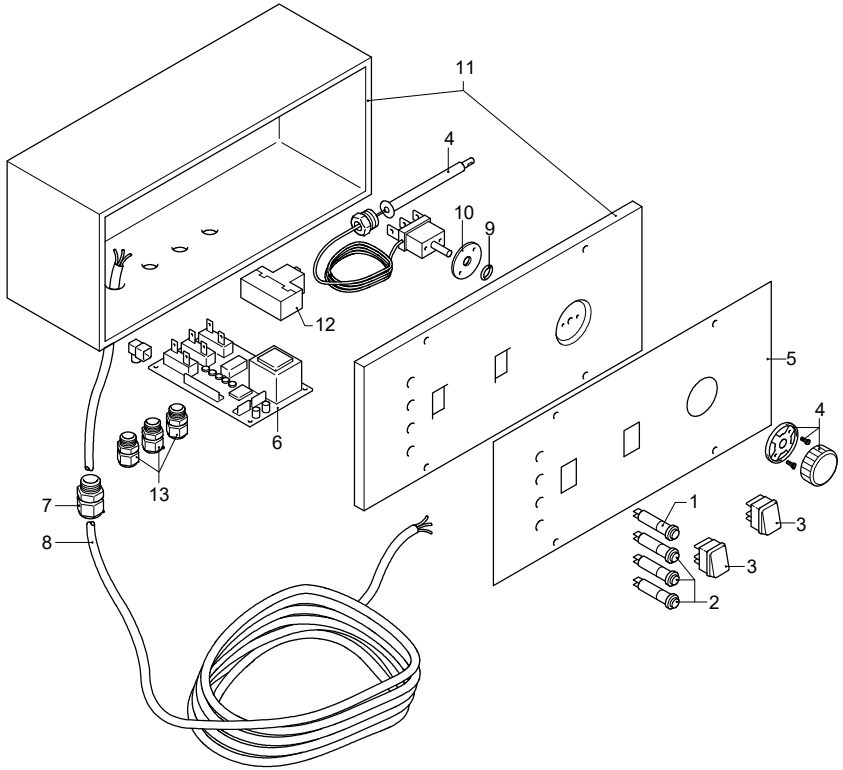

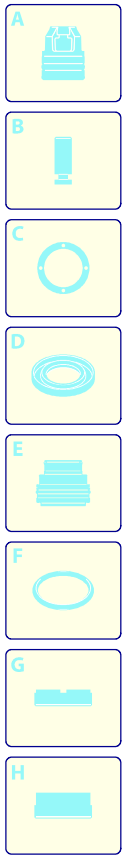

Validity	Pos.	Code	Description	Q
	1	3260120	Lamp	1
	2	3260140	Lamp	1
	3	50674	Switch	1
	4	50322	Thermostat	1
	5	51424	Plate	1
	6	3260080	Board	1
	7	50577	Gland	1
	8	1760450	Cable	1
	9	3260440	O-ring	1
	10	3260450	Gasket	1
	11	51428	Box	1
	12	1382060	Switch	1
	13	50577	Gland	3

UN_CE_1163-LT

Model 1380-N

Version:

Serial number:

Code: **25284**

26/04/2018

400 V - 50 Hz

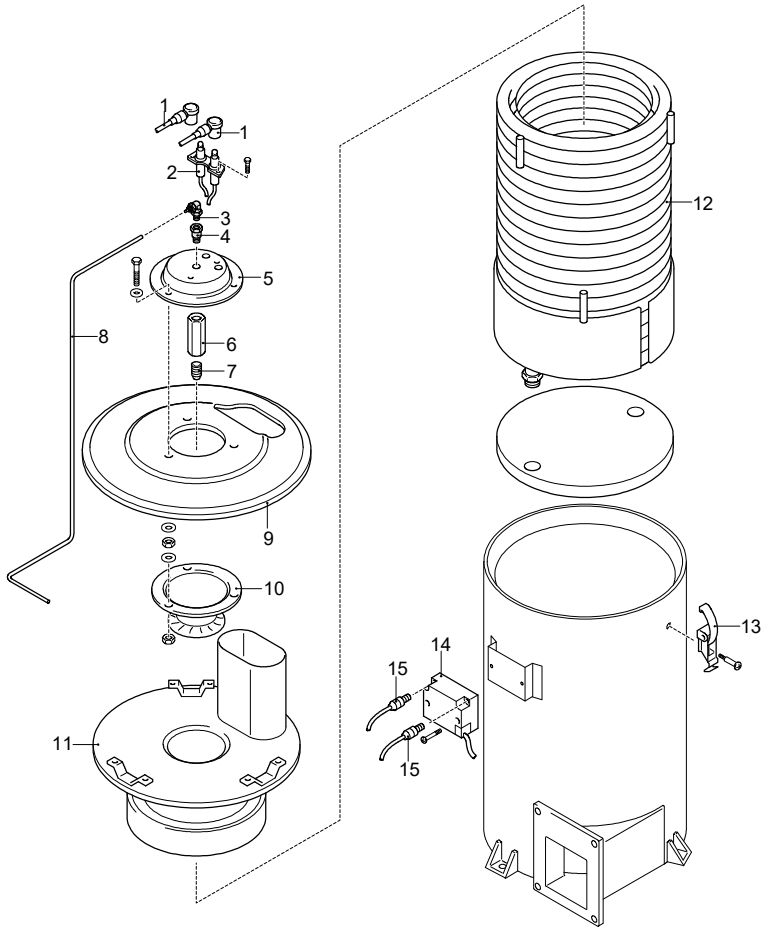

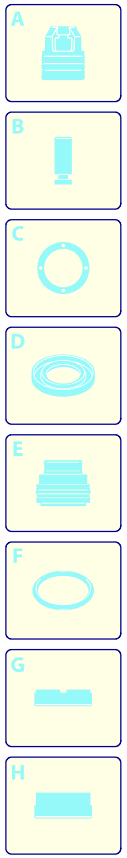

Validity	Pos.	Code	Description	Q
	1	3260520	Cable	2
	2	50548	Electrode	1
	3	50751	Fitting	1
	4	50468	Fitting	1
	5	50586	Cover	1
	6	50465	Fitting	1
	7	51130	Nozzle	1
	8	50603	Pipe	1
	9	50586	Cover	1
	10	50588	Support	1
	11	50593	Cover	1
	12	50589	Pipe coil	1
	13	50450	Hook	4
	14	3260040	Transformer	1
	15	3260520	Cable	2

UN_CE_1159-LT

Model 1380-N

Version:

Serial number:

Code: **25284**

26/04/2018

400 V - 50 Hz

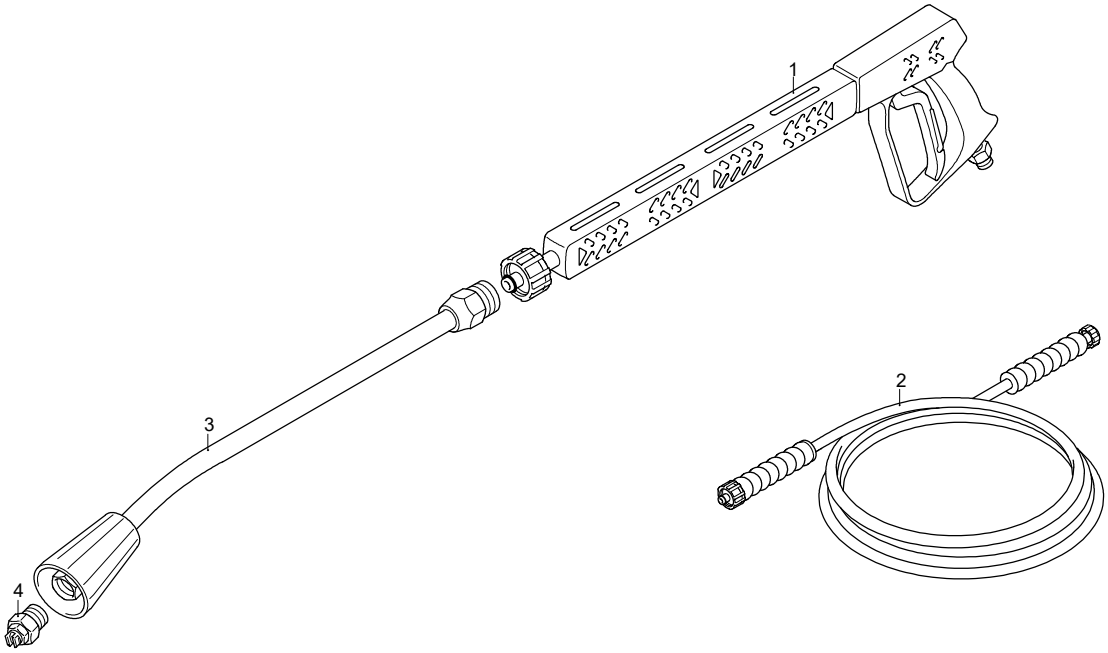

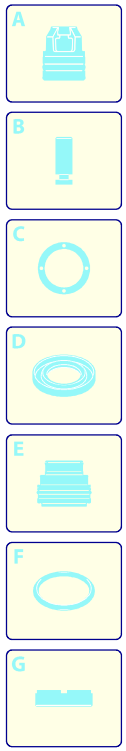

Validity	Pos.	Code	Description	Q
	1	40825	Gun	1
	2	3160160	High pressure hose	1
	3	40826	Lance	1
	4	3086	Nozzle	1

UN_CE_0482-FW