Model 1320

Version:

Serial number:

Code: **25273**

26/04/2018

230 V - 50 Hz

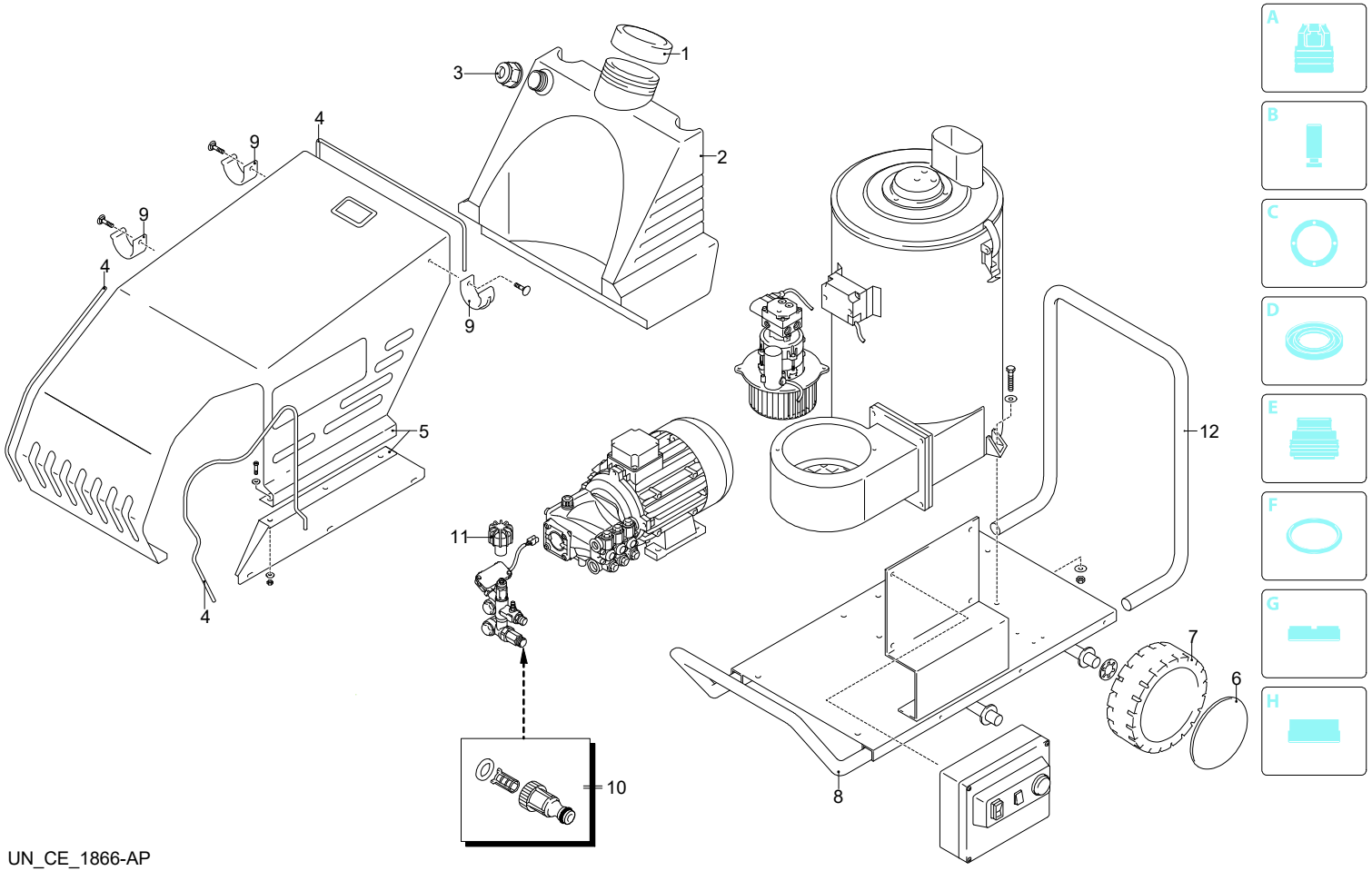

UN_CE_1866-AP

Validity	Pos.	Code	Description	Q
	1	50611	Plug	1
	2	51421	Tank	1
	3	51443	Plug	1
	4	50601	Gasket	1
	5	51469	Casing	1
	6	50628	Guard	1
	7	50627	Wheel	1
	8	51470	Frame	1
	9	51420	Accessories carrier	3
	10	3082130	Water coupling kit	1
	11	2360760	Knob	1
	12	51471	Handle	1

Model 1320

Version:

Serial number:

Code: **25273**

26/04/2018

230 V - 50 Hz

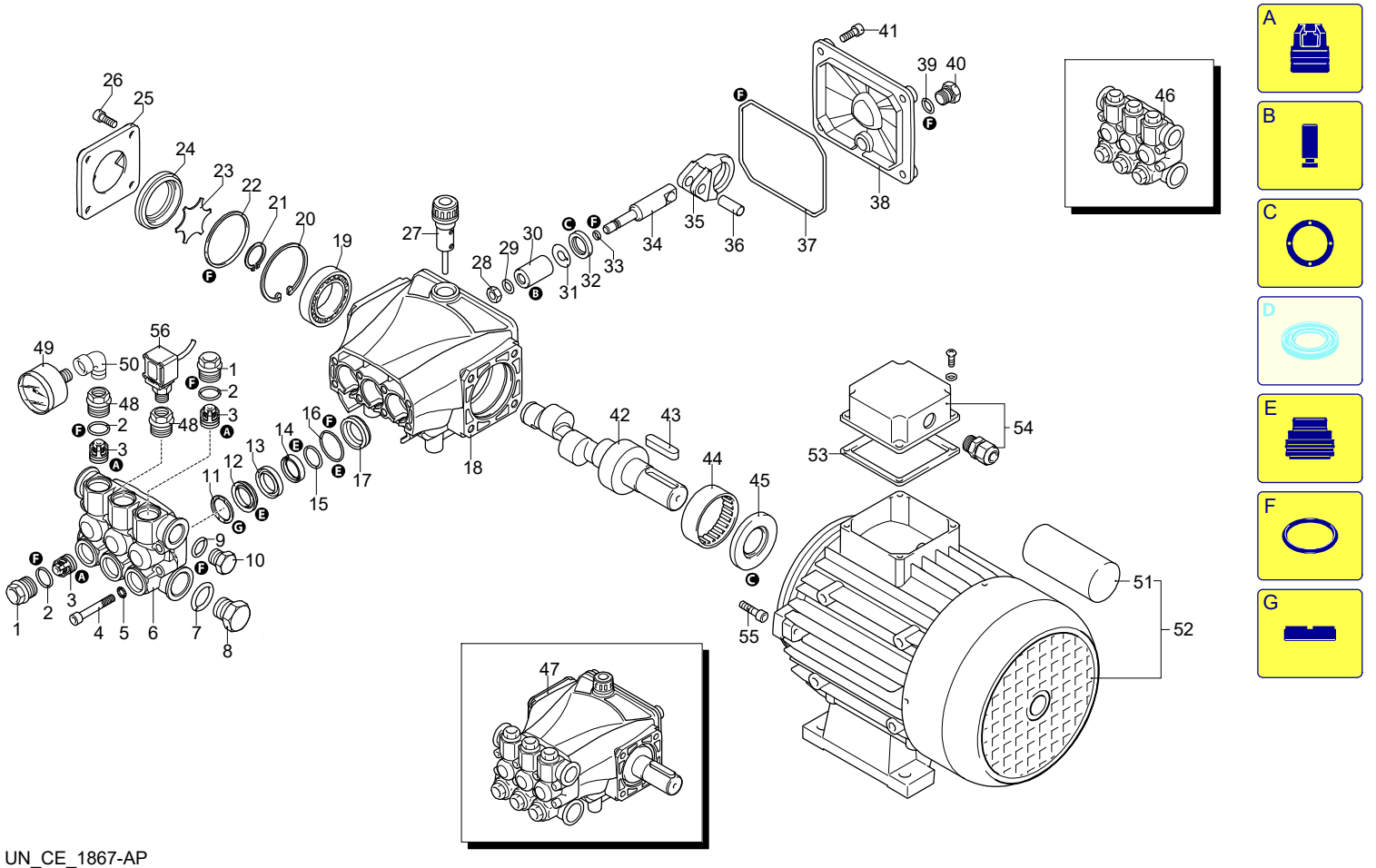

Validity	Pos.	Code	Description	Q
	1	3200110	Plug	5
	2	1200690	O-ring	6
	3	2769050	Complete valve	6
	4	800410	Screw	8
	5	1381550	Washer	8
	6	3200020	Head	1
	7	180101	O-ring	1
	8	820361	Plug	1
	9	740290	O-ring	1
	10	1980740	Plug	1
	11	1780140	Ring	3
	12	1780720	Water seal	3
	13	3200130	Piston guide	3
	14	3200142	Gasket	3
	15	3200260	Ring	3
	16	770590	O-ring	3
	17	3200120	Piston guide	3
	18	3200010	Pump body	1
	19	1780490	Bearing	1
	20	1260790	Ring	1
	21	1780550	Ring	1
	22	395081	O-ring	1
	23	3200090	Plate	1
	24	3200080	Level gauge	1
	25	3200070	Support	1
	26	1200430	Screw	4
	27	880130	Plug	1
	28	1260110	Nut	3
	29	1260100	Washer	3
	30	1260210	Piston	3
	31	1260091	Plate	3
	32	1260460	Oil seal	3
	33	480480	O-ring	3
	34	3200060	Piston	3
	35	3200040	Connecting-rod	3
	36	1780050	Pin	3
	37	2760280	O-ring	1
	38	3200030	Cover	1
	39	820510	O-ring	1
	40	880581	Plug	1
	41	3200220	Screw	4
	42	3200300	Shaft	1
	43	3200230	Key	1
	44	1321190	Bearing	1
	45	1260750	Ring	1
	46	3209200	Head assembly	1
	47	23384	Pump assembly	1
	48	3200430	Plug	2
	49	3230	Pressure gauge	1
	50	1465850	Fitting	1
	51	51015	Capacitor	1
	52	44372	Motor	1
	53	50068	Gasket	1
	54	50099	Box	1
	55	1200430	Screw	1
	56	3520050	Pressure switch	1
	A	2186	Valve kit	1
	B	42467	Piston kit	1
	C	42468	Oil seal kit	1
	E	42469	Water seal kit	1
	F	42470	Gasket kit	1
	G	2745	Support ring kit	1

Model 1320

Version:

Serial number:

Code: **25273**

26/04/2018

230 V - 50 Hz

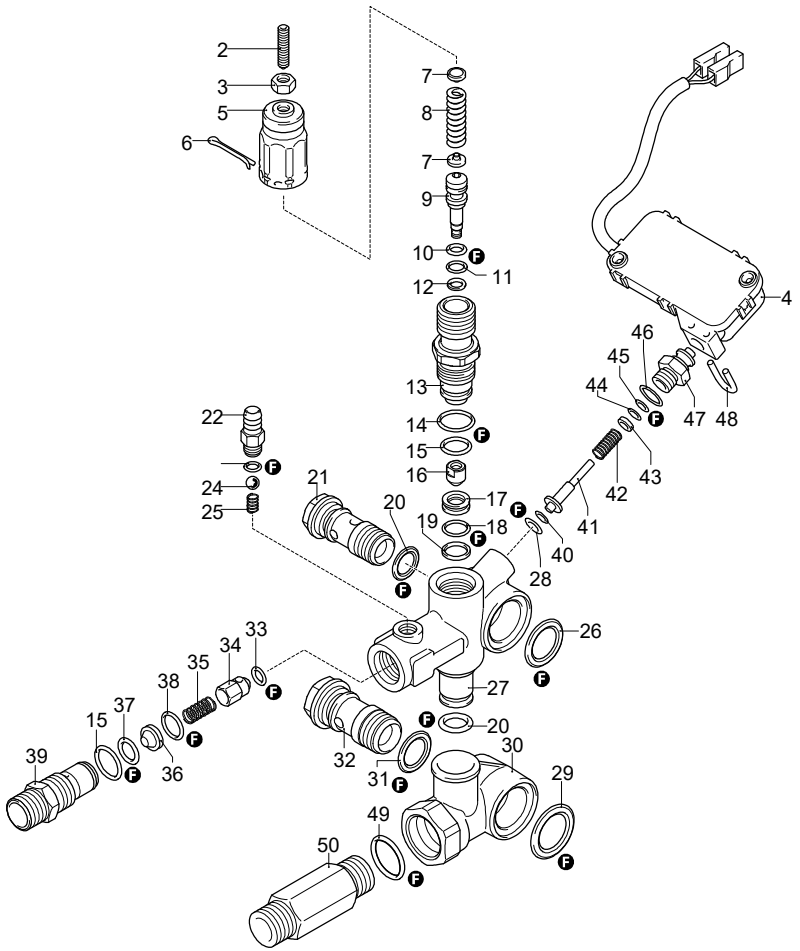

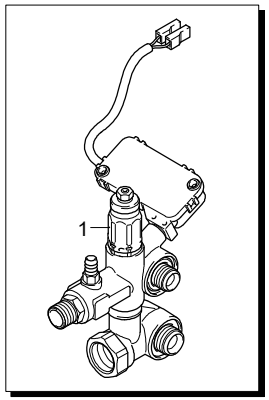

A B C D E F G

UN_CE_1868-AP

Validity	Pos.	Code	Description	Q
	1	24324	Complete valve	1
	2	2840970	Screw	1
	3	1060120	Nut	1
	4	2029752	TSS box assembly	1
	5	2500540	Insert	1
	6	2500550	Split pin	1
	7	1980220	Wobble plate	2
	8	2760410	Spring	1
	9	2760400	Piston	1
	10	2260100	O-ring	1
	11	660190	O-ring	1
	12	2760210	Ring	1
	13	2760570	Guide	1
	14	1200690	O-ring	1
	15	394280	O-ring	5
	16	2260070	Shutter	1
	17	2760980	Seat	1
	18	770140	O-ring	1
	19	2760640	Ring	1
	20	390080	O-ring	2
	21	1540272	Screw	1
	22	1982520	Hose tail	1
	23	480480	O-ring	1
	24	1250280	Ball	1
	25	1560520	Spring	1
	26	2260190	O-ring	1
	27	3740010	Valve body	1
	28	1120681	O-ring	1
	29	1540630	O-ring	1
	30	3740020	Body	1
	31	880270	O-ring	1
	32	2260420	Screw	1
	33	2101770	O-ring	1
	34	2760131	Shutter	1
	35	2760200	Spring	1
	36	2760120	Injector	1
	37	1470210	O-ring	1
	38	2760270	O-ring	1
	39	2760230	Fitting	1
	40	2260480	Ring	1
	41	2260470	Pin	1
	42	2260460	Spring	1
	43	2021650	Washer	1
	44	1260821	O-ring	1
	45	3740050	Ring	1
	46	600180	O-ring	1
	47	3740040	Fitting	1
	48	2022201	Fork	1
	49	480440	O-ring	1
	50	1560600	Fitting	1
	F	42780	Gasket kit	1

Model 1320

Version:

Serial number:

Code: **25273**

26/04/2018

230 V - 50 Hz

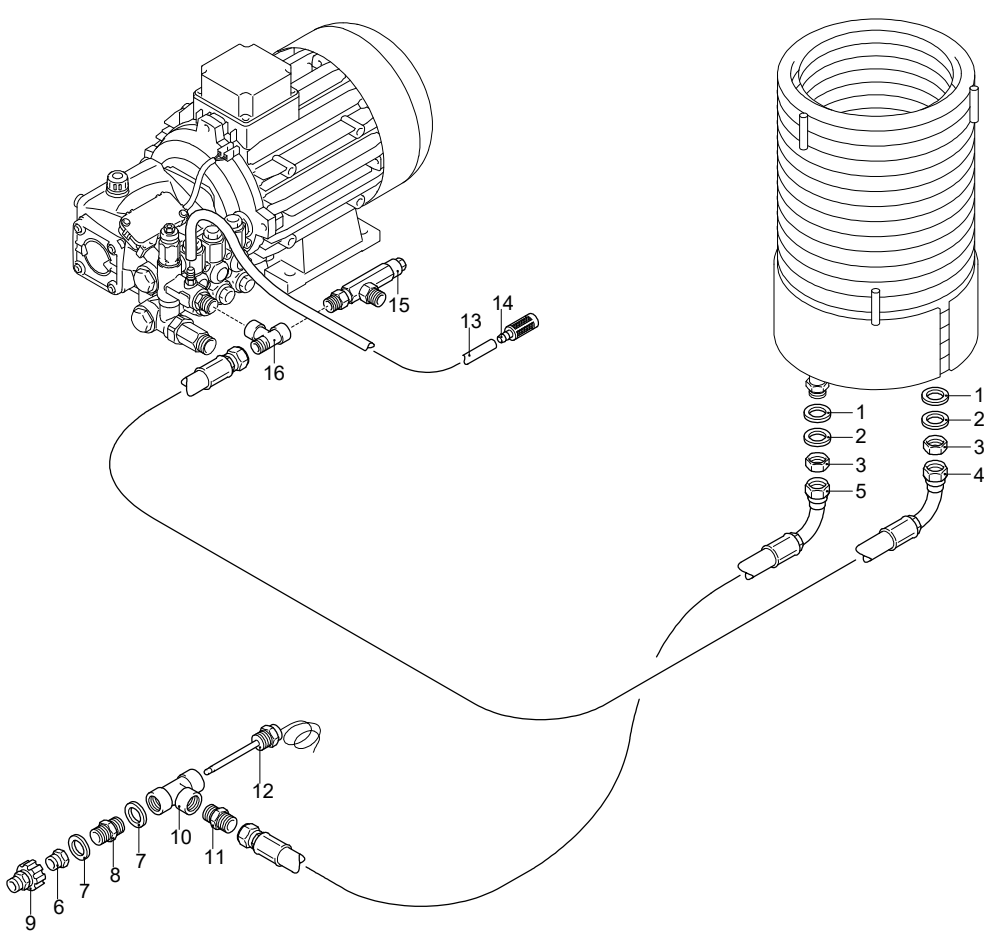

UN_CE_1869-AP

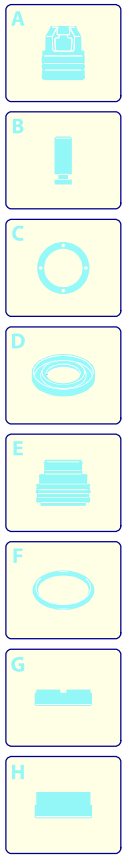

Validity	Pos.	Code	Description	Q
	1	50514	Washer	1
	2	50541	Washer	1
	3	50527	Nut	2
	4	51415	Pipe	1
	5	3260310	High pressure hose	1
	6	50481	Fitting	2
	7	50517	Washer	1
	8	50463	Fitting	1
	9	50480	Fitting	1
	10	50461	Fitting	1
	11	50463	Fitting	1
	12	50322	Thermostat	1
	13	1262790	Detergent hose	1
	14	1341030	Filter	1
	15	3260110	Safety valve	1
	16	50479	Fitting	1

Model 1320

Version:

Serial number:

Code: **25273**

26/04/2018

230 V - 50 Hz

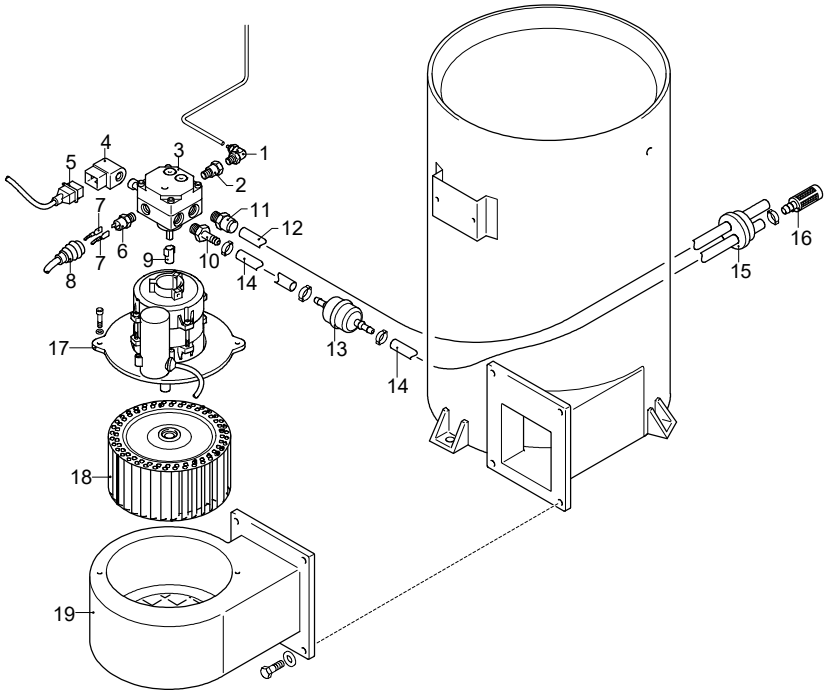

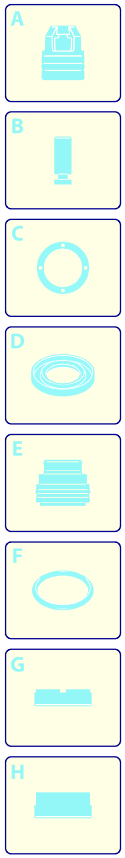

Validity	Pos.	Code	Description	Q
	1	50751	Fitting	1
	2	50468	Fitting	1
	3	3160310	Pump	1
	4	3160320	Solenoid	1
	5	3161440	Cable	1
	6	3260050	Pressure switch	1
	7	3260370	Connector	1
	8	3260380	Guard	1
	9	3160300	Coupling	1
	10	50491	Hose tail	1
	11	50464	Fitting	1
	12	50603	Pipe	1
	13	50747	Filter	1
	14	50608	Pipe	1
	15	50595	Plug	1
	16	1341030	Filter	1
	17	50647	Motor	1
	18	50584	Fan	1
	19	50590	Casing	1

UN_CE_1345-FS

Model 1320

Version:

Serial number:

Code: **25273**

26/04/2018

230 V - 50 Hz

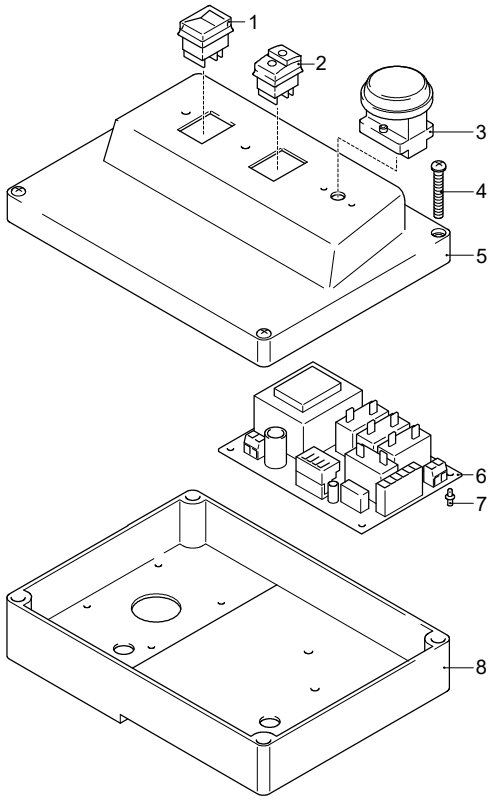

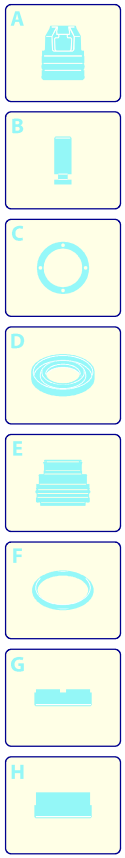

Validity	Pos.	Code	Description	Q
	1	1262180	Switch	1
	2	50581	Switch	1
	3	50646	Thermostat	1
	4	50722	Pressure switch	4
	5	50676	Cover	1
	6	3162790	Board	1
	7	50602	Spacer	4
	8	50614	Box	1

UN_CE_1342-FS

Model 1320

Version:

Serial number:

Code: **25273**

26/04/2018

230 V - 50 Hz

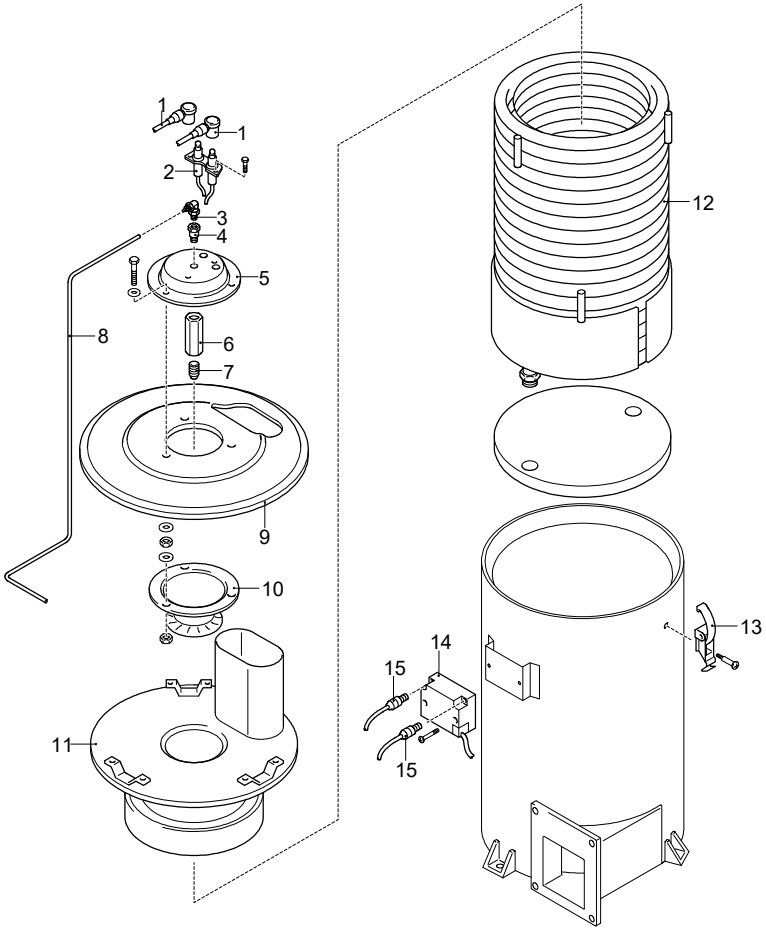

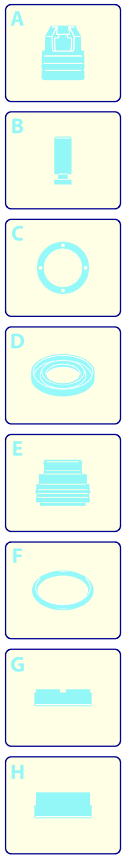

Validity	Pos.	Code	Description	Q
	1	3260520	Cable	2
	2	50548	Electrode	1
	3	50751	Fitting	1
	4	50468	Fitting	1
	5	50586	Cover	1
	6	50465	Fitting	1
	7	51129	Nozzle	1
	8	50603	Pipe	1
	9	50586	Cover	1
	10	50588	Support	1
	11	50593	Cover	1
	12	50589	Pipe coil	1
	13	50450	Hook	4
	14	3260040	Transformer	1
	15	3260520	Cable	2

UN_CE_1343-FS

Model 1320

Version:

Serial number:

Code: **25273**

26/04/2018

230 V - 50 Hz

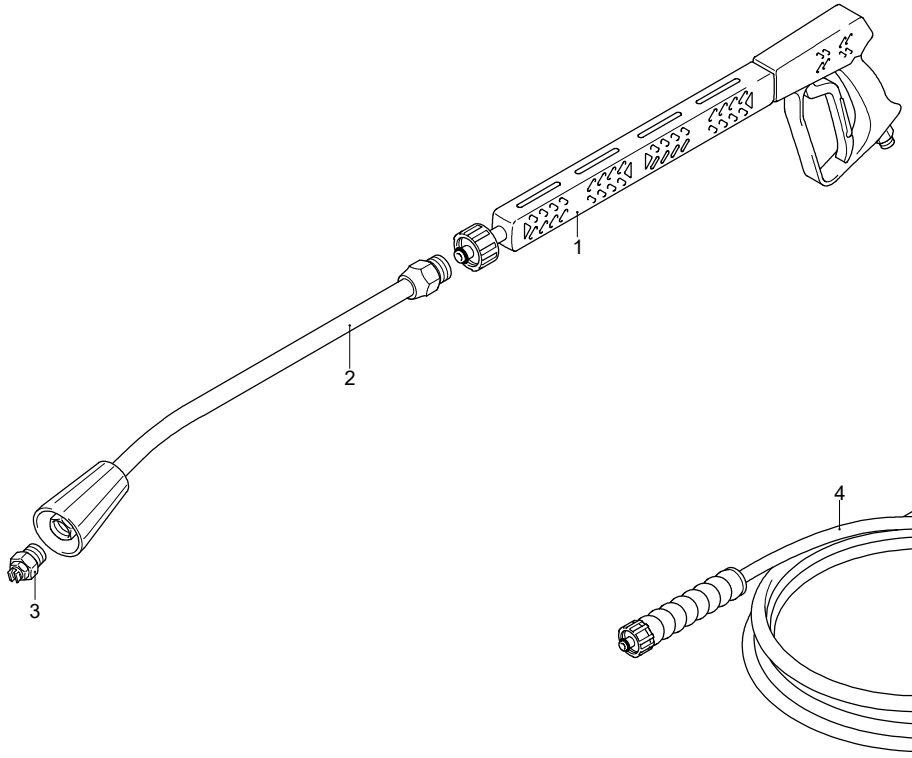

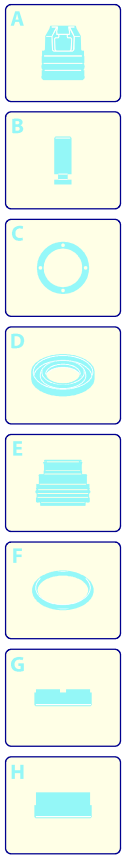

Validity	Pos.	Code	Description	Q
	1	41047	Gun	1
	2	40826	Lance	1
	3	3082	Nozzle	1
	4	3160160	High pressure hose	1

UN_CE_1344-FS