Model 1280 S

Version:

Serial number:

Code: **26291**

11/05/2017

400 V - 50 Hz

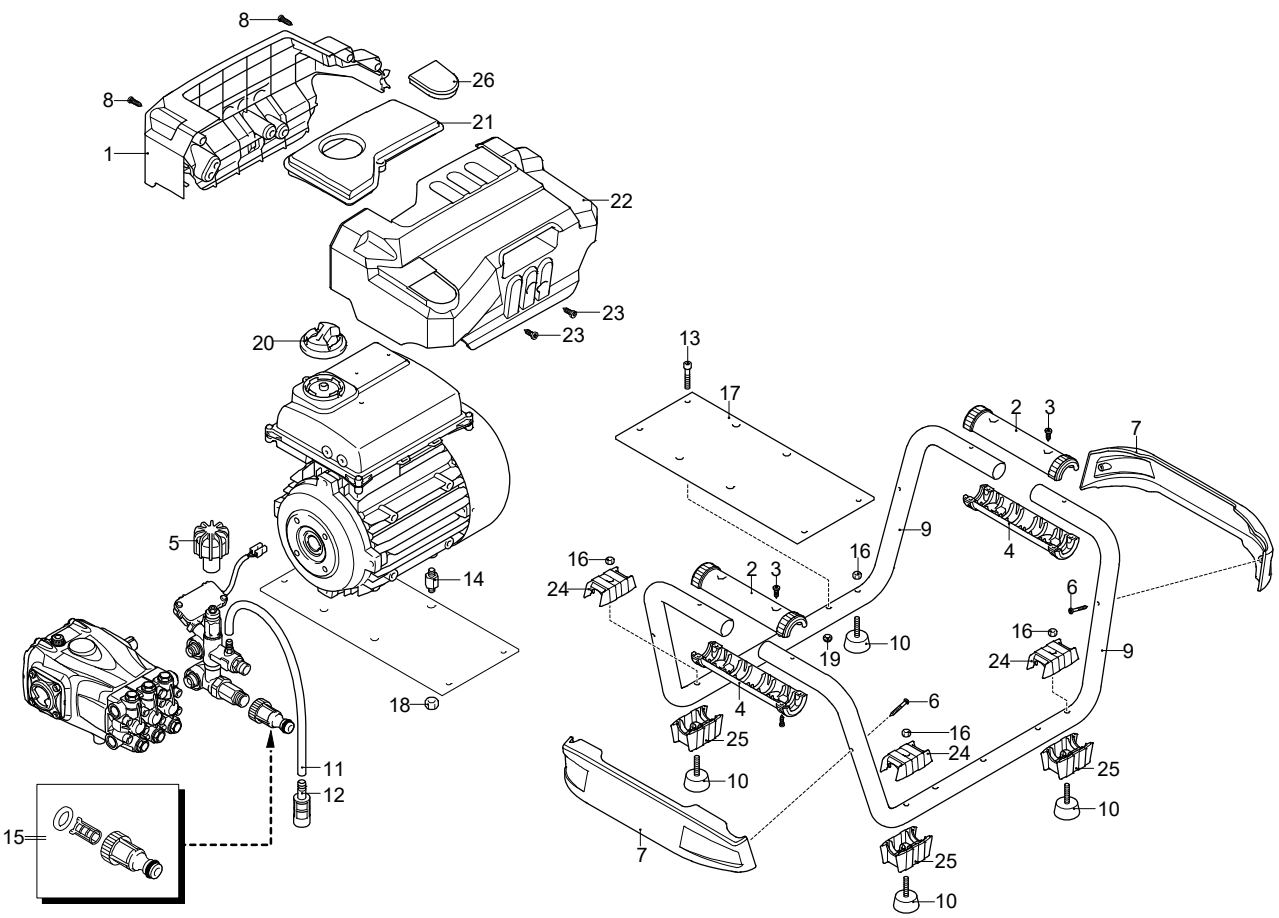

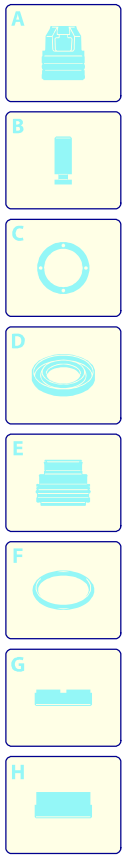

UN_CE_2137-CN

Validity	Pos.	Code	Description	Q
	1	3960811	Casing	1
	2	3600200	Guard	2
	3	2060200	Screw	4
	4	3600040	Guard	2
	5	2360760	Knob	1
	6	2021780	Screw	4
	7	3600320	Guard	1
	8	2100300	Screw	3
	9	3601050	Frame	2
	10	3960360	Vibration damper	4
	11	1262790	Detergent hose	1
	12	1341030	Filter	1
	13	1200440	Screw	4
	14	2360580	Stud bolt	4
	15	3082130	Water coupling kit	1
	16	1060120	Nut	4
	17	3601070	Plate	1
	18	380240	Nut	4
	19	3000170	Nut	4
	20	3960260	Knob	1
	21	3960790	Support	1
	22	3960801	Casing	1
	23	180030	Screw	4
	24	3960340	Guard	4
	25	3960350	Guard	4
	26	3601080	Plug	1

Model 1280 S

Version:

Serial number:

Code: **26291**

11/05/2017

400 V - 50 Hz

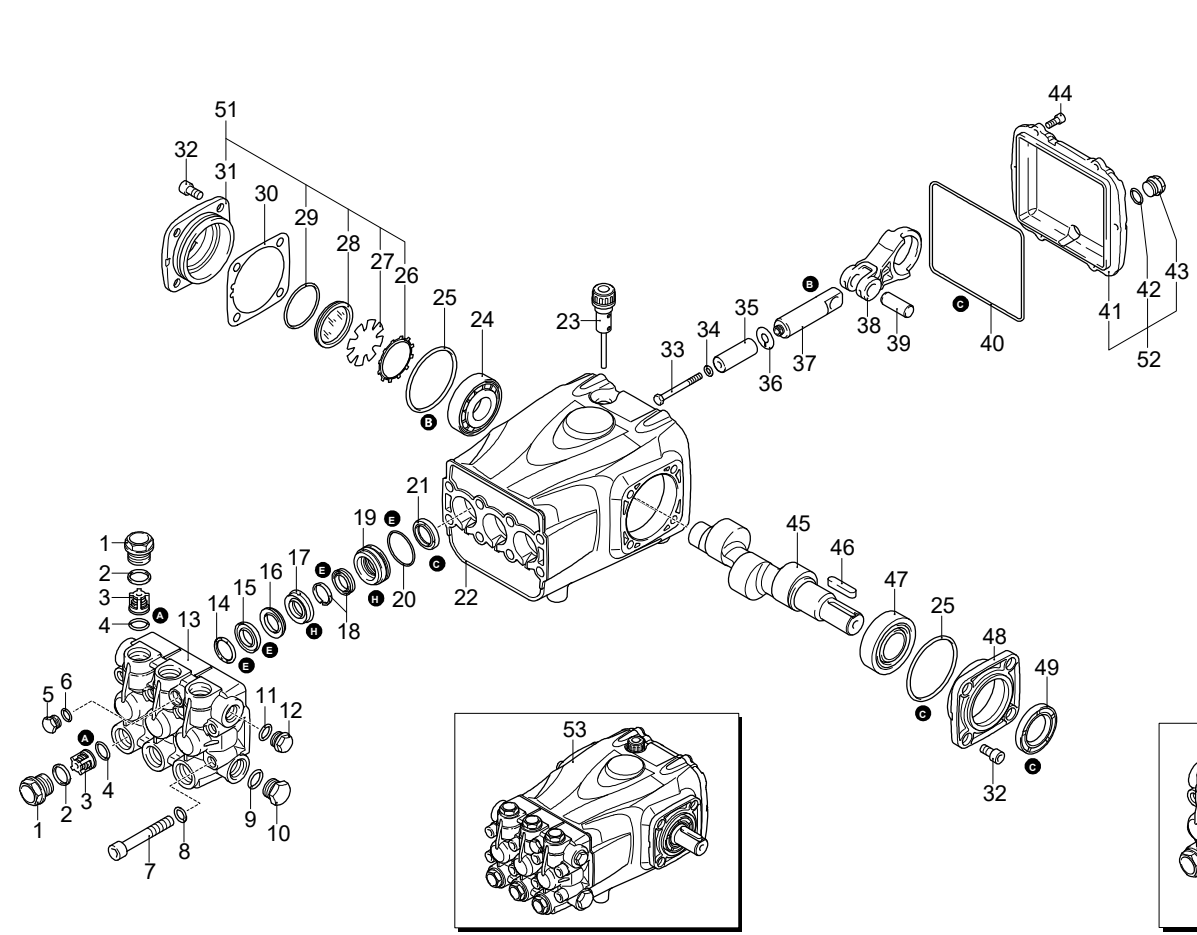

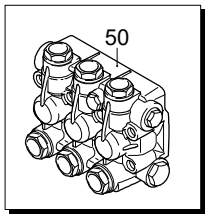

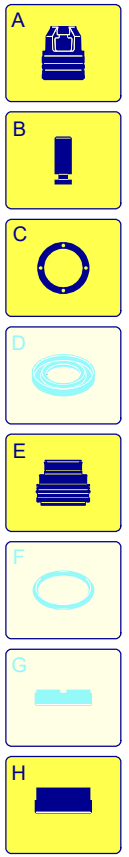

UN_CE_2141-CN

Validity	Pos.	Code	Description	Q
	1	4020140	Plug	6
	2	960160	O-ring	6
	3	1389051	Complete valve	6
	4	880830	O-ring	6
	5	880581	Plug	1
	6	820510	O-ring	1
	7	2980100	Screw	8
	8	650530	Washer	8
	9	180101	O-ring	1
	10	820361	Plug	1
	11	740290	O-ring	1
	12	1980740	Plug	1
	13	4020020	Head	1
	14	960110	Ring	3
	15	1382740	Water seal	3
	16	2340310	Ring	3
	17	2980070	Piston guide	3
	18	1942690	Water seal	3
	19	1942480	Piston guide	3
	20	820490	O-ring	3
	21	1940560	Ring	3
	22	4020010	Pump body	1
	23	1140370	Plug	1
	24	1140420	Bearing	1
	25	1941380	O-ring	2
	26	4020080	Ring	1
	27	4020070	Plate	1
	28	4020160	Level gauge	1
	29	3680250	O-ring	1
	30	4020100	Shim 0.05 mm	1
	30	4020110	Shim 0.10 mm	1
	30	4020120	Shim 0.19 mm	1
	30	4020130	Shim 0.25 mm	1
	31	4020150	Cover	1
	32	850370	Screw	8
	33	1941640	Screw	3
	34	1340600	Washer	3
	35	1941020	Piston	3
	36	1383190	Plate	3
	37	1940960	Piston	3
	38	2980010	Connecting-rod	3
	39	1940060	Pin	3
	40	1940410	O-ring	1
	41	4020030	Cover	1
	42	740290	O-ring	1
	43	1980740	Plug	1
	44	1200430	Screw	6
	45	2980160	Shaft	1
	46	3200230	Key	1
	47	1941370	Bearing	1
	48	4020040	Cover	1
	49	820680	Ring	1
	50	4029200	Head assembly	1
	51	4029000	Cover	1
	52	4029001	Cover	1
	53	3969406	Pump assembly	1
	A	42169	Valve kit	1
	B	2872	Piston kit	1
	C	2873	Oil seal kit	1
	E	42171	Water seal kit	1
	H	42172	Piston guide kit	1

Model 1280 S

Version:

Serial number:

Code: **26291**

11/05/2017

400 V - 50 Hz

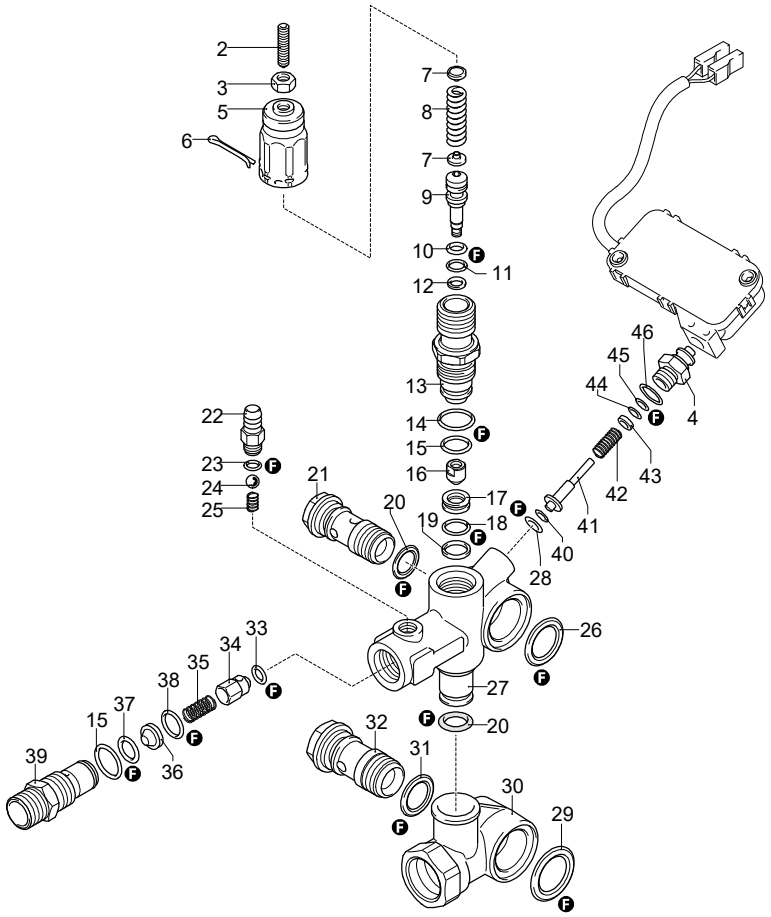

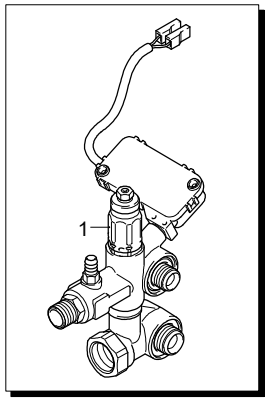

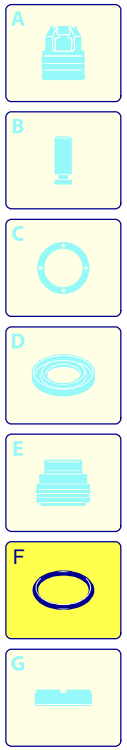

Validity	Pos.	Code	Description	Q
	1	24324	Complete valve	1
	2	2840970	Screw	1
	3	1060120	Nut	1
	4	3740070	Fitting	1
	5	2500540	Insert	1
	6	2500550	Split pin	1
	7	1980220	Wobble plate	2
	8	2760410	Spring	1
	9	2760400	Piston	1
	10	2260100	O-ring	1
	11	660190	O-ring	1
	12	2760210	Ring	1
	13	2760570	Guide	1
	14	1200690	O-ring	1
	15	394280	O-ring	2
	16	2260070	Shutter	1
	17	2760980	Seat	1
	18	770140	O-ring	1
	19	2760640	Ring	1
	20	390080	O-ring	2
	21	1540272	Screw	1
	22	1982520	Hose tail	1
	23	480480	O-ring	1
	24	1250280	Ball	1
	25	1560520	Spring	1
	26	2260190	O-ring	1
	27	3740010	Valve body	1
	28	1120681	O-ring	1
	29	1540630	O-ring	1
	30	2260430	Suction fitting	1
	31	880270	O-ring	1
	32	2260420	Screw	1
	33	2101770	O-ring	1
	34	2760131	Shutter	1
	35	2760200	Spring	1
	36	2760120	Insert	1
	37	1470210	O-ring	1
	38	2760270	O-ring	1
	39	2760230	Fitting	1
	40	3740190	Ring	1
	41	3740180	Pin	1
	42	2260460	Spring	1
	43	2021650	Washer	1
	44	1260821	O-ring	1
	45	3740050	Ring	1
	46	600180	O-ring	1
	F	42780	Gasket kit	1

UN_CE_2140-CN

Model 1280 S

Version:

Serial number:

Code: **26291**

11/05/2017

400 V - 50 Hz

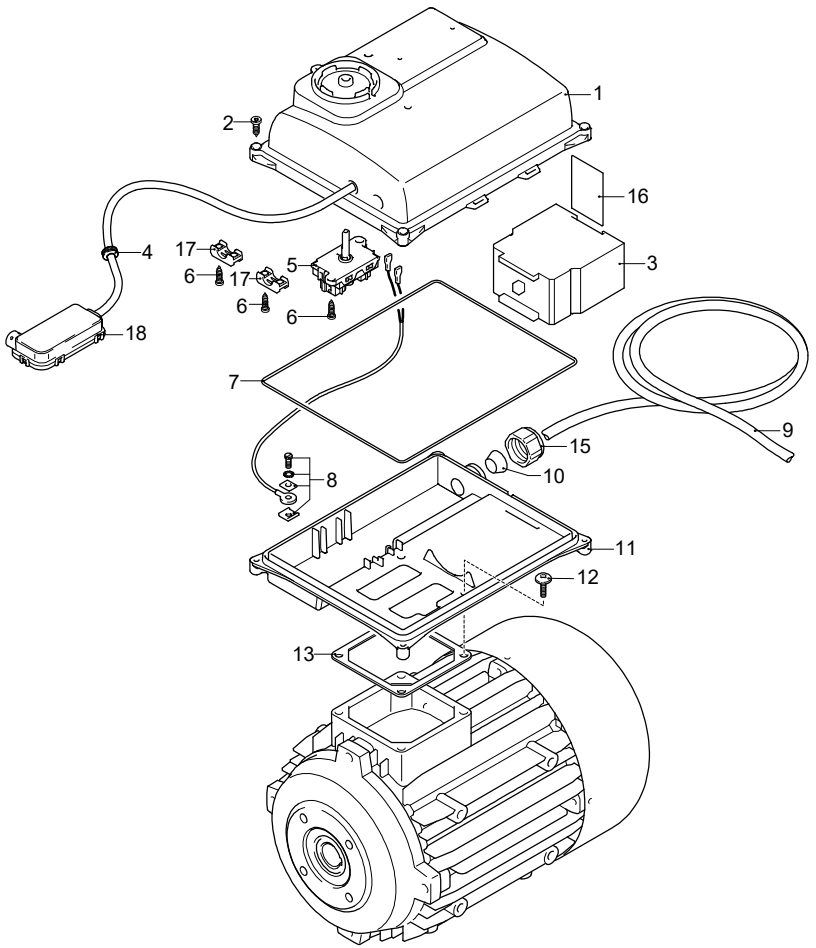

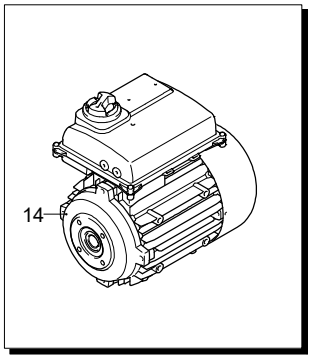

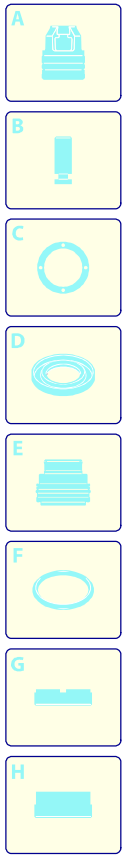

Validity	Pos.	Code	Description	Q
	1	3960740	Box	1
	2	2560720	Screw	4
	3	2360950	Mini-contactor	1
	4	2021480	Gland	1
	5	2900420	Switch	1
	6	2000210	Screw	6
	7	3960650	O-ring	1
	8	1269100	Clamp	1
	9	1700640	Cable	1
	10	3961090	Gasket	1
	11	3960730	Plate	1
	12	3960980	Screw	4
	13	1700100	Gasket	1
	14	44954	Motor	1
	15	3960640	Cable gland	1
	16	3960990	Guide	1
	17	1263020	Clamp	2
	18	3749000	TSS box assembly	1

UN_CE_2138-CN

Model 1280 S

Version:

Serial number:

Code: **26291**

11/05/2017

400 V - 50 Hz

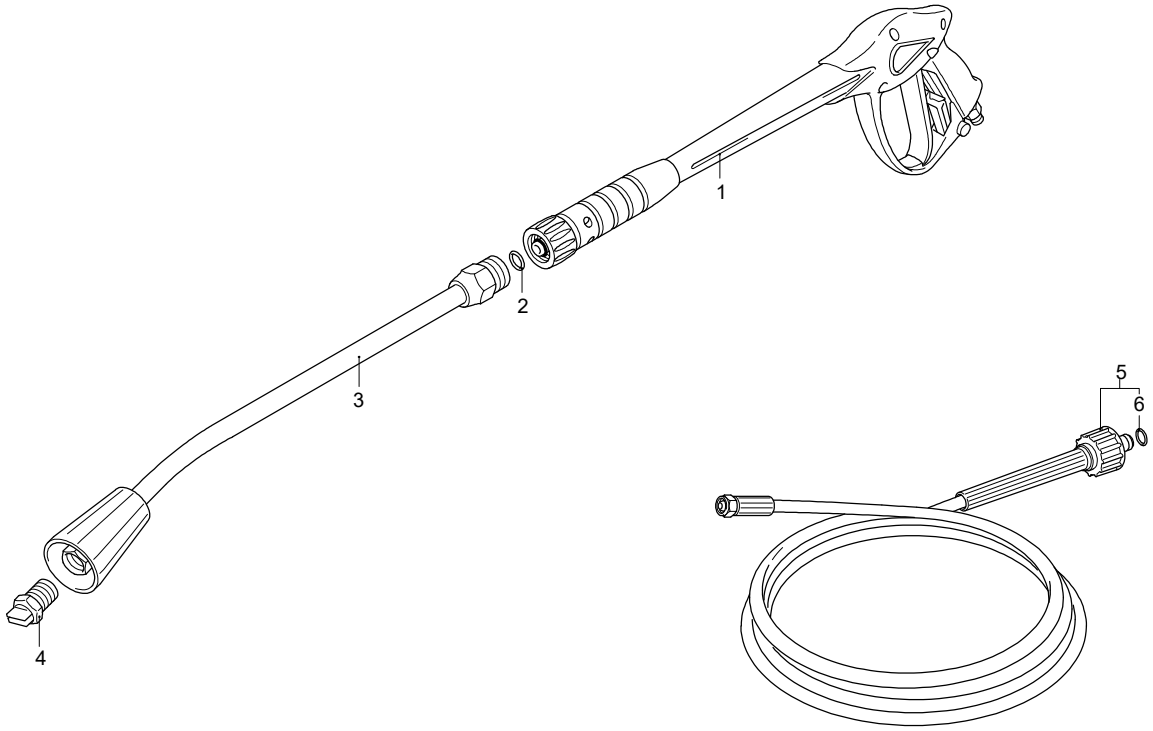

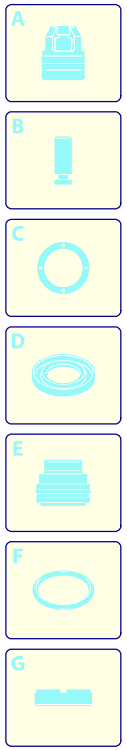

Validity	Pos.	Code	Description	Q
	1	41045	Gun	1
	2	391000	O-ring	1
	3	40826	Lance	1
	4	3095	Nozzle	1
	5	1700980	High pressure hose	1
	6	2000570	O-ring	1

UN_CE_2139-CN