Model 1240

Version:

Serial number:

Code: **22378**

07/11/2015

400 V - 50 Hz

schuko

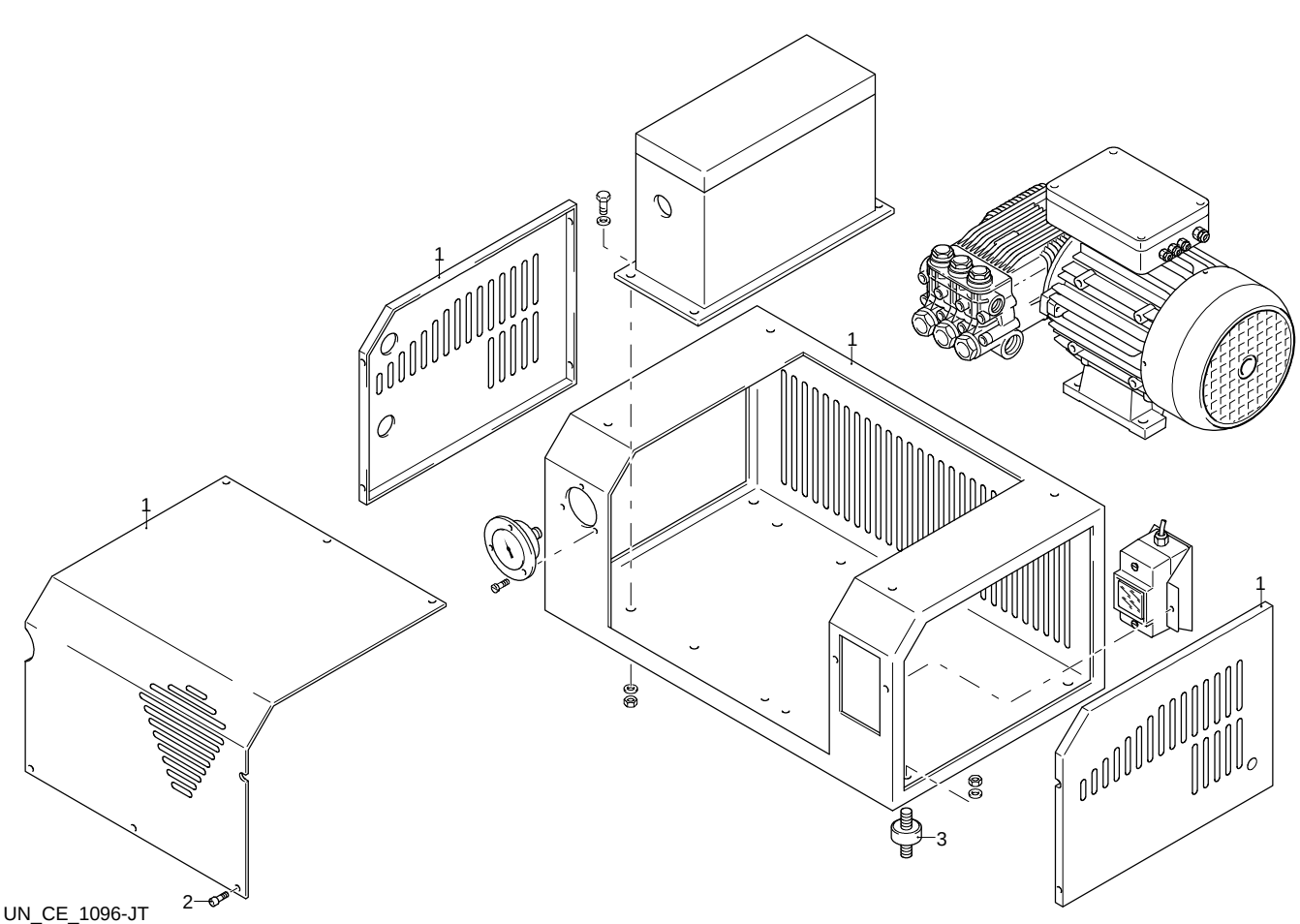

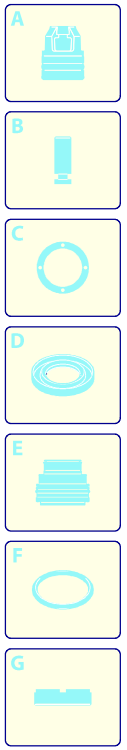

Validity	Pos.	Code	Description	Q
	1	51396	Casing	1
	2	50775	Screw	6
	3	51409	Vibration damper	4

Model 1240

Version:

Serial number:

Code: **22378**

07/11/2015

400 V - 50 Hz | **schuko**

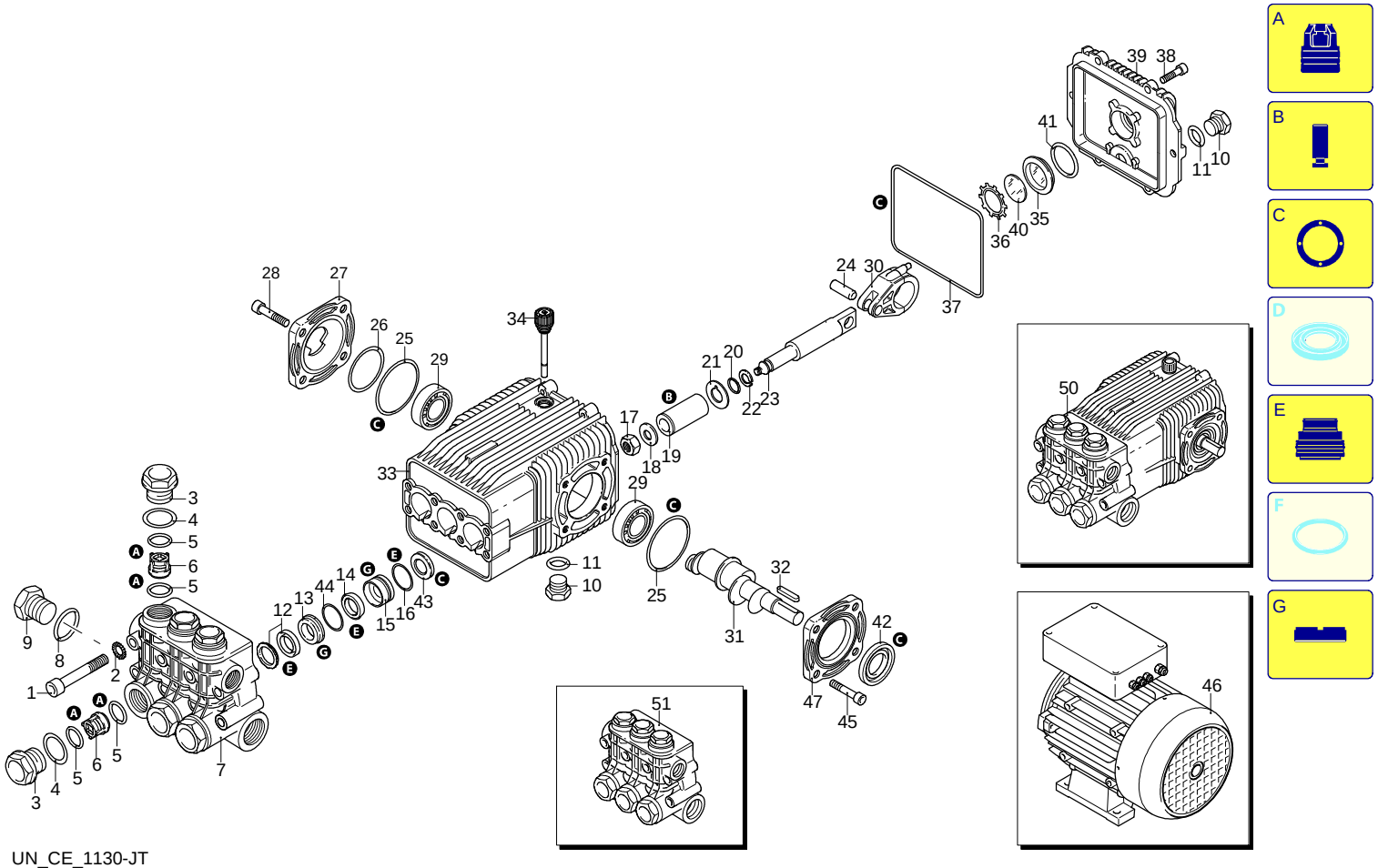

UN_CE_1130-JT

Validity	Pos.	Code	Description	Q
	1	1940260	Screw	8
	2	650530	Washer	8
	3	1940140	Plug	6
	4	1940150	Ring	6
	5	1140450	O-ring	12
	6	1949050	Complete valve	6
	7	1940021	Head	1
	8	550350	O-ring	1
	9	1140300	Plug	1
	10	1980740	Plug	2
	11	740290	O-ring	2
	12	1940440	Gasket	3
	13	1940430	Piston guide	3
	14	1940470	Gasket	3
	15	1940450	Piston guide	3
	16	820490	O-ring	3
	17	1940570	Nut	3
	18	1940580	Washer	3
	19	1420430	Piston	3
	20	880840	O-ring	3
	21	960460	Plate	3
	22	1940120	Ring	3
	23	1940070	Piston	3
	24	1940060	Pin	3
	25	1941380	O-ring	2
	26	1941390	Shim 0.05 mm	1
	26	1941400	Shim 0.10 mm	1
	26	1941410	Shim 0.19 mm	1
	26	1941420	Shim 0.25 mm	1
	27	1949011	Cover	1
	28	850370	Screw	4
	29	1941370	Bearing	2
	30	1940051	Connecting-rod	3
	31	1940520	Shaft	1
	32	650250	Key	1
	33	1941330	Pump body	1
	34	1140370	Plug	1
	35	1260250	Level gauge	1
	36	1260430	Ring	1
	37	1940410	O-ring	1
	38	1200430	Screw	6
	39	1949010	Cover	1
	40	1780690	Plate	1
	41	1140450	O-ring	1
	42	820680	Ring	1
	43	1940560	Ring	3
	44	1941220	Gasket	3
	45	680350	Screw	4
	46	44123	Motor	1
	47	1941240	Support	1
	50	20353	Pump assembly	1
	51	1949200	Head assembly	1
	A	2780	Valve kit	1
	B	2650	Piston kit	1
	C	2873	Oil seal kit	1
	E	2782	Water seal kit	1
	G	2784	Piston guide kit	1

Model 1240

Version:

Serial number:

Code: **22378**

07/11/2015

400 V - 50 Hz | **schuko**

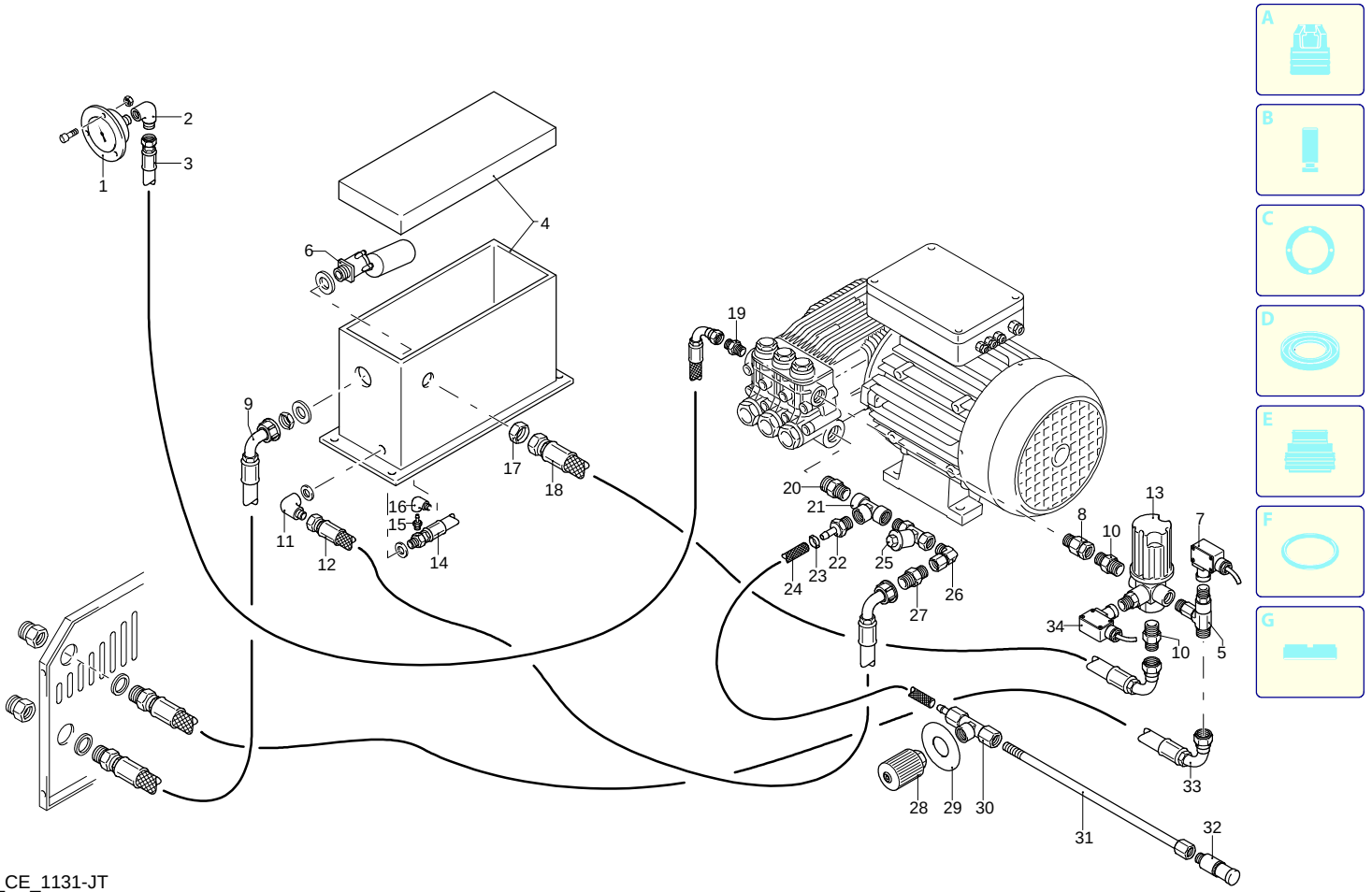

UN_CE_1131-JT

Validity	Pos.	Code	Description	Q
	1	50486	Pressure gauge	1
	2	50471	Fitting	1
	3	50661	Pipe	1
	4	51397	Casing insert	1
	5	50478	Fitting	1
	6	50657	Float	1
	7	51414	Pressure switch	1
	8	50466	Fitting	1
	9	51403	Pipe	1
	10	50467	Fitting	1
	11	50472	Fitting	1
	12	51405	Pipe	1
	13	50654	Valve	1
	14	51404	Pipe	1
	15	51402	Hose tail	1
	16	50462	Fitting	1
	17	50906	Nut	1
	18	51406	Pipe	1
	19	50749	Fitting	1
	20	50907	Fitting	1
	21	50461	Fitting	1
	22	50491	Hose tail	1
	23	50451	Clamp	1
	24	50608	Pipe	1
	25	50474	Fitting	1
	26	50472	Fitting	1
	27	50487	Fitting	1
	28	50656	Knob	1
	29	51400	Plate	1
	30	50533	Fitting	1
	31	50453	Pin	1
	32	50446	Filter	1
	33	50661	Pipe	1
	34	51414	Pressure switch	1

Model 1240

Version:

Serial number:

Code: **22378**

07/11/2015

400 V - 50 Hz | **schuko**

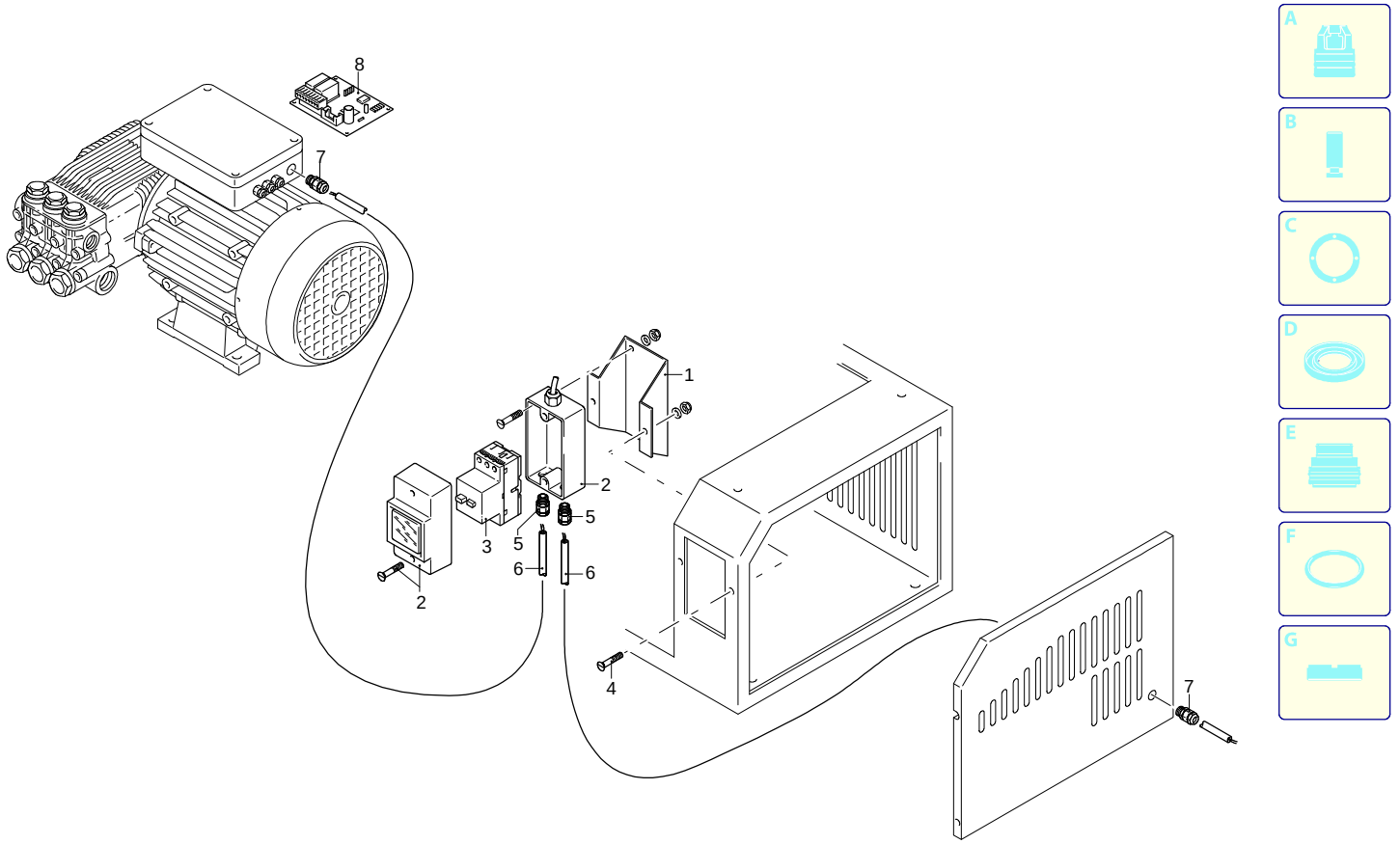

Validity	Pos.	Code	Description	Q
	1	51399	Bracket	1
	2	51408	Box	1
	3	1382020	Electromagnetic switch	1
	4	50775	Screw	1
	5	50559	Gland	1
	6	50576	Cable	1
	7	50557	Gland	1
	8	50286	Board	1

UN_CE_1097-BS

Model 1240

Version:

Serial number:

Code: **22378**

07/11/2015

400 V - 50 Hz

schuko

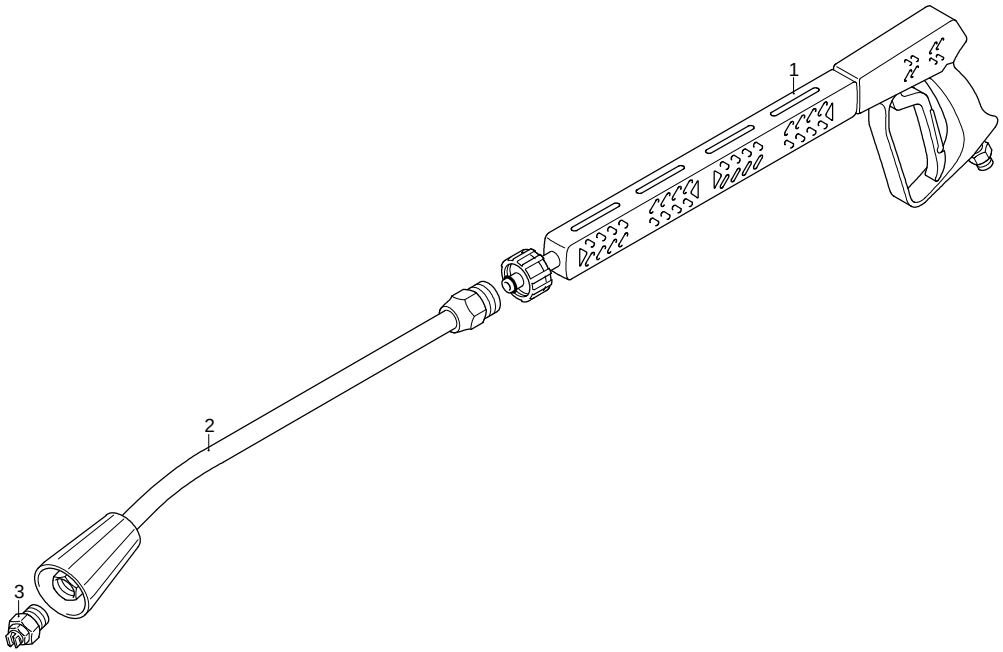

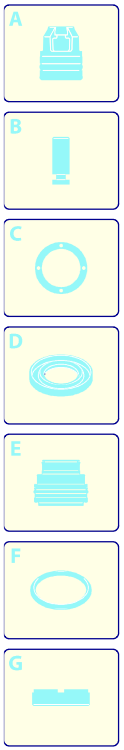

Validity	Pos.	Code	Description	Q
	1	41847	Gun	1
	2	50246	Lance	1
	3	3087	Nozzle	1

UN_CE_1132-JT